Easy Wipe-On Finishes

LEARN THE BEST WAY TO MAKE TABLE LEGS

Woodsmith®

www.Woodsmith.com

Vol. 25 / No. 147

Weekend Project: Classic Oak Plant Stands

also inside:

Elegant Hall Table

straightforward construction with a flare

Plus:

Simple Router Mortising Jig

A Publication of August Home Publishing

Woodsmith

No. 147 June, 2003

Publisher Donald B. Peschke
Editor Terry J. Strohman
Assistant Editors Ted Raife, Phil Huber
Art Director Todd Lambirth
Senior Illustrators David Kreyling, Dirk Ver Steeg, Harlan V. Clark
Graphic Intern Nathan Robertson

CREATIVE RESOURCES
Creative Director: Ted Kralicek • *Sr. Project Designers:* Ken Munkel, Kent Welsh, Ryan Mimick, Chris Fitch • *Shop Craftsmen:* Steve Curtis, Steve Johnson • *Sr. Photographer:* Crayola England

SPECIAL PUBLICATIONS
Corp. VP: Douglas L. Hicks • *Art Director:* Douglas A. Flint • *Senior Graphic Designer:* Chris Glowacki • *Senior Editor:* Craig Ruegsegger • *Asst. Editor:* Joel A. Hess • *Graphic Designers:* Vu Nguyen, Jonathan Eike • *Edit. Intern:* Cindy Thurmond

CIRCULATION
Subscriber Services Director: Sandy Baum • *New Business Circ. Mgr.:* Wayde Klingbeil • *Promotions Analyst:* Patrick Walsh • *Renewal Mgr.:* Paige Rogers • *Billing & Collections Manager:* Rebecca Cunningham • *Circ. Marketing Analysts:* Kris Schlemmer, Paula M. DeMatteis • *Sr. Graphic Designers:* Mark Hayes, Robin Friend

CORPORATE SERVICES
VP of Finance: Mary R. Scheve • *Controller:* Robin K. Hutchinson • *Sr. Account.:* Laura J. Thomas • *Accts. Payable:* Mary J. Schultz • *Accts. Receivable:* Margo Petrus • *Production Dir.:* George Chmielarz • *Electronic Pub. Dir.:* Douglas M. Lidster • *System Administrator:* Cris Schwanebeck • *PC Maint. Tech.:* Robert D. Cook • *Pre-press Image Specialists:* Troy A. Clark, Minniette Johnson • *New Media Mgr.:* Gordon C. Gaippe • *Web Site Art Dir.:* Gene Pedersen • *Web Server Admin.:* Carol Schoeppler • *Web Content Mgrs.:* David Briggs, Sue M. Moe • *Web Designer:* Kara Blessing • *Research Coordinator:* Nick Jaeger • *Pro. Development Dir.:* Michal Sigel • *H.R. Asst.:* Kirsten Koele • *Office Mgr.:* Natalie Lonsdale • *Facilities Mgr.:* Kurt Johnson • *Receptionist:* Jeanne Johnson • *Mail Room/Delivery:* Lou Webber

WOODSMITH MAIL ORDER
Operations Director: Bob Baker • *Cust. Service Mgr.:* Jennie Enos • *Warehouse Supr.:* Nancy Johnson • *Buyer:* Linda Jones • *Admin. Assist.:* Nancy Downey • *Sr. Cust. Serv. Reps.:* Tammy Truckenbrod, Anna Cox, April Revell, Deborah Rich • *Cust. Serv. Reps.:* Valerie Jo Riley, Kim Harlan • *Warehouse:* Sylvia Carey

WOODSMITH STORE
Mgr.: Dave Larson • *Merchandise Marketing Mgr.:* John Siberell • *Asst. Manager:* Tim Thelen • *Sales Staff:* Wendell Stone, Larry Morrison, Mark Johnson, Gregory Kauzlarich, Brian McCallum • *Office Mgr.:* Vicki Edwards

Woodsmith® (ISSN 0164-4114) is published bimonthly (Feb., Apr., June, Aug., Oct., Dec.) by August Home Publishing Company, 2200 Grand, Des Moines, IA 50312.
Woodsmith® is a registered trademark of August Home Publishing.

Copyright© 2003 August Home Publishing Company. All rights reserved.

Subscriptions: Single copy: $4.95. One year subscription (6 issues), $24.95. (Canada/International add $10 per year, U.S. funds.)
Periodicals Postage Paid at Des Moines, IA and at additional offices. USPS/Perry-Judd's Heartland Division Automatable Poly.
Postmaster: Send change of address to *Woodsmith*, Box 37112, Boone, IA 50037-2112.
Subscription Questions? Write to *Woodsmith*, P.O. Box 842, Des Moines, IA 50304-9961 or call 1-800-333-5075, 8:00 am to 5:00 pm, Central Time, weekdays. Or send an email to: orders@woodsmith.com
Email: woodsmith@woodsmith.com
World Wide Web: http://www.Woodsmith.com

Printed in U.S.A.

AUGUST HOME PUBLISHING COMPANY

EDITOR'S COLUMN

SAWDUST

Trying something new. It's one of my favorite parts of woodworking. So naturally I was excited when I first saw the sketches of the table featured in this issue. It had a unique, flared leg design that we hadn't done before.

Of course I was anxious to start working on this project. But first things first. We spent quite a bit of time talking about the procedure for making the legs. And I'm glad we did. Because the design of the flared legs quickly led to another part of woodworking I enjoy — problem solving.

However, the problem didn't have anything to do with actually shaping the legs. That's surprisingly straightforward. It can be done easily with a band saw and a router table. The problem is one you can run into any time you make table legs — the blank.

Now you can easily glue up a blank to cut the legs out of. The problem comes in when you cut *through* one of the glue joint lines. You can end up with a sudden change in grain direction, a glaring joint line, or both.

Sure, you could buy a large, solid piece of stock, but that can be a rather expensive option. And it doesn't necessarily solve the problem of grain direction. Typically, one face will have straight grain and the adjacent face will have figured grain.

So what's the solution? Well, we came up with a way to create a glued-up leg blank without any visible glue joint lines. This may not sound like a big deal, but to me it's one of those small details of craftsmanship that make woodworking so rewarding.

For the complete story on how to use this new technique on your next project, be sure to check out the article that begins on page 6.

the Woodsmith video workshop

Speaking of new, we've added a new feature to our web site — *The Woodsmith Video Workshop*. It's a new way for us to share more woodworking information with you.

You can expect to find the same detailed and practical information you've come to expect from *Woodsmith*. The big difference is — the photos and artwork are moving. Now you can virtually stand next to someone as they show you a new woodworking tip or technique. Visit our web site to check it out and let me know what you think.

Terry

Woodsmith Readers' Gallery

Visit other *Woodsmith* subscribers' workshops, and see photos of the projects they've built. It's all online in the new Readers' Gallery on the *Woodsmith* web site:
www.Woodsmith.com

We want you to be part of the Readers' Gallery! To submit photos of your favorite *Woodsmith* projects or views of your shop, follow the instructions you'll find at the Readers' Gallery.

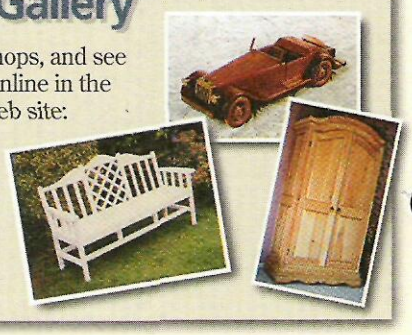

A LOOK INSIDE

CONTENTS

Features

Making Leg Blanks 6

A great-looking table leg starts with the right leg blank. We'll show you how to make the best blank without any hassle.

Cutting and Shaping Table Legs 8

Table legs don't always have to be straight. Shaped legs can add a little flair and you'll be surprised at how easy they are to make.

Hall Table 10

This cherry and curly maple veneer hall table looks like it might take some pretty sophisticated woodworking. But don't be fooled. It's just straightforward joinery and a couple special techniques.

Adjustable Mortising Jig 18

Build a jig that can handle just about any mortising job you have. Plus, we'll give you some handy tips to get the most from it.

Classic Oak Plant Stand 24

Featuring a simple joinery technique, this classic-looking plant stand comes in two sizes. It's a perfect weekend project.

Shooting Board 28

Tight miters are no longer a problem with this jig and a plane.

Tips for Sanding Success 30

Get the most out of your sanding time with these basic guidelines.

The Secret to Wipe-on Finishes 32

Confused about wipe-on finishes? Learn what you need to know to pick the right finish and apply it like a pro.

Low-Angle Spokeshave 34

This redesigned hand tool can help you smooth out the curves.

Departments

Tips & Techniques 4

Shop Notes 23

Sources 35

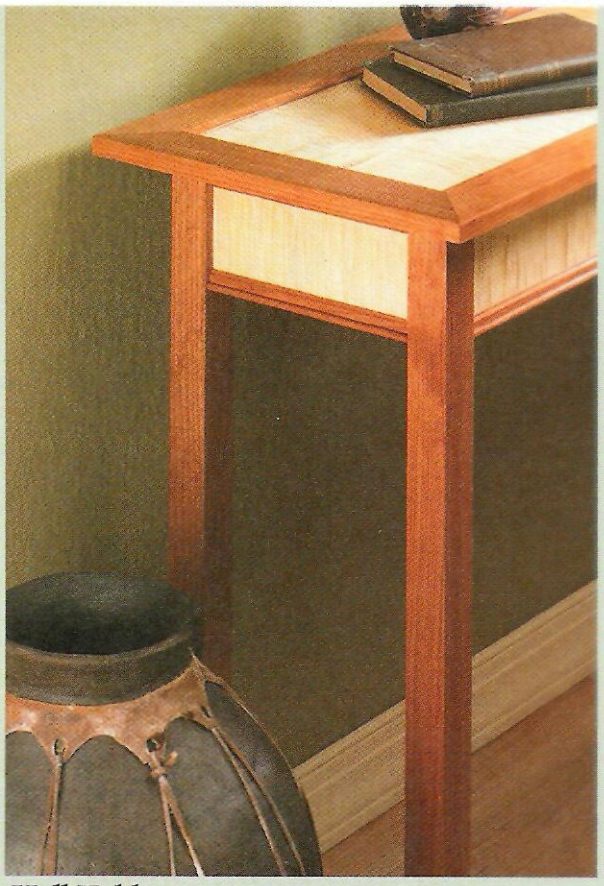

Hall Table *page 10*

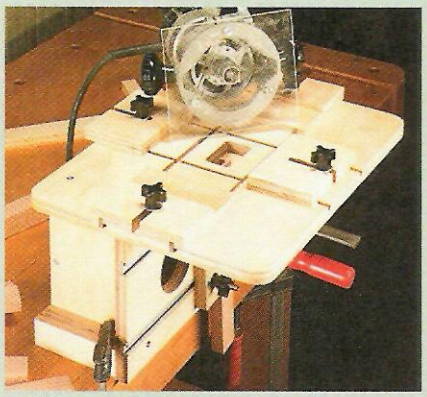

Adjustable Mortising Jig *page 18*

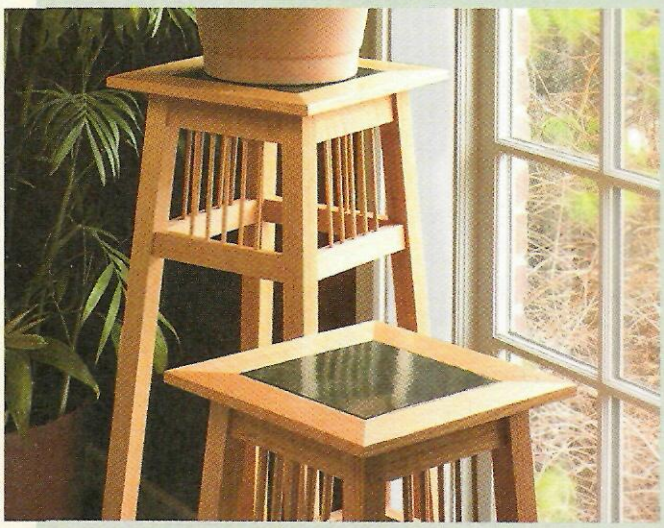

Classic Oak Plant Stand *page 24*

TIPS & TECHNIQUES

FREE
Online Tips

If you'd like even more woodworking tips, there's a simple solution. Just visit us at our web site and sign up to receive a free tip via email every week.

www.Woodsmith.com

Swinging Clamp Storage

Storage space in my small shop is hard to come by. So when it comes to keeping things organized, it pays to be a little creative.

Finding a place to store long pipe clamps is a challenge for anyone, but I came up with a swing-out rack that I attached to some shelves in my shop.

Most of the time, the rack sits against the shelves. But when I need to get something from the shelves, the rack easily swings out of the way, as in the drawing at right.

The best part about this rack is that it can be attached just about anywhere. As you can see in the drawing below, the clamp rack is made from some "two-by" stock and 3/4"-thick scrap. Two frame arms are joined by a half lap joint at the lower corner to form an "L." An angled, 3/4"-thick cross brace supports the lower arm and a clamp rail. The cross brace is screwed into angled dadoes cut in the frame arms.

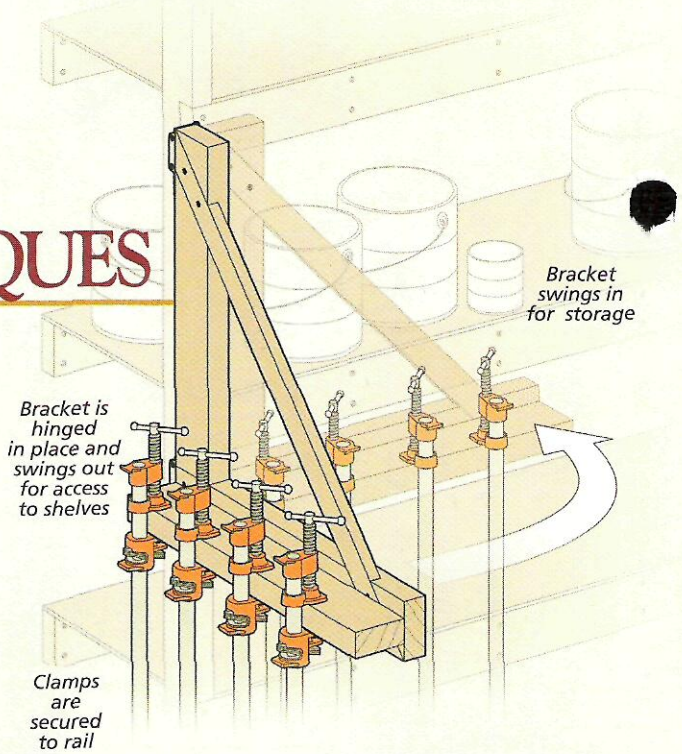

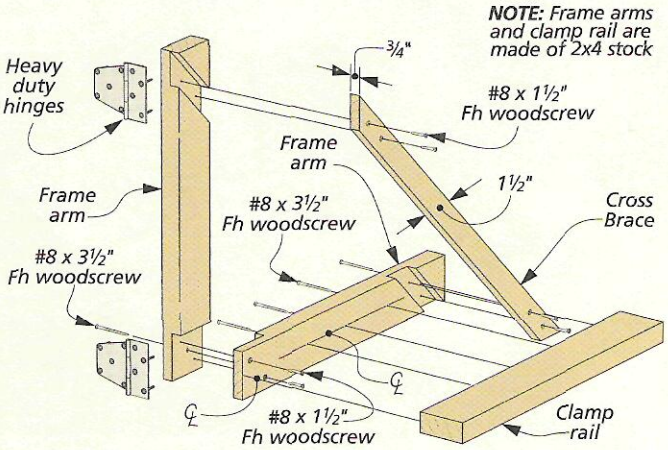

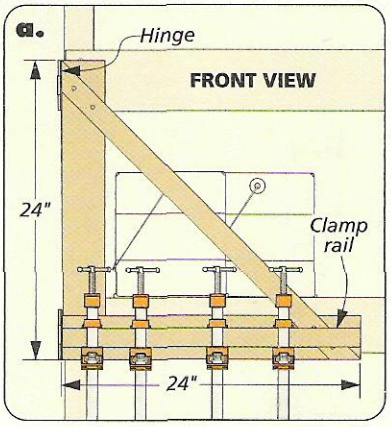

The clamp rail on the lower arm is just a piece of "two-by" stock. Then the clamps are simply tightened on the rail. The clamp rail is fastened to the lower frame arm by 3 1/2"-long woodscrews. To attach the clamp rack to the shelves, I used a pair of heavy-duty hinges. There's just one thing to watch out for, since the rack can be pretty heavy, you'll want to make sure the hinges are anchored securely to the shelf post.

Bob Kelley
Vancouver, Washington

Duo Disc Sander

The disc sander in my shop gets a lot of use. It's used for quick wood removal and for final smoothing. Unfortunately, this means frequent disc changes.

That is, until I came up with this simple solution. I attached a small disc of one grade of sandpaper to the center of the sander and a ring from a different grit around it, as in the drawing.

If you cut both discs at the same time, you'll end up with two sets of sanding rings, as you can see in the photo at left.

Dan Reeve
Swanville, Maine

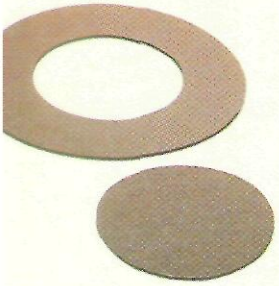

▲ *Fit two grits of sandpaper on a disc sander at the same time.*

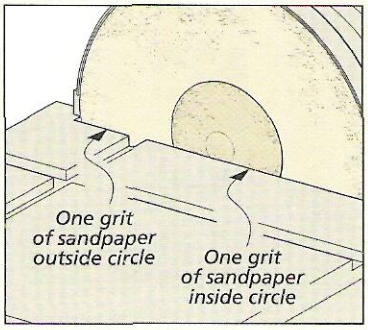

Shrink Wrap Clamping

Pipe clamps and bar clamps work great for most of the projects I build. But when it comes to angled or curved parts, they just don't work. To clamp odd-sized pieces, I've started using plastic cling wrap. You can find it at hardware stores or from a moving supplies company, like *U-Haul*.

What's great about it is that it doesn't mar the workpiece and can be wrapped pretty tightly around objects like the legs of the stool, as shown in the photo at left. Another advantage is that glue does not stick to it.

Dale Evans
Clinton, Washington

Drill Press Sanding Jig

I make a lot of wooden toys for my grandchildren, such as push horses, trucks, and trains. This means I'm cutting and shaping a lot of wheels. I usually use a hole saw to quickly cut out the wheels to rough size.

The problem is that the edges are pretty rough and they still need to be rounded over. What I needed was a way to speed up the shaping and sanding process.

So I devised this simple jig for my drill press, as you can see in the photo below. The jig is basically just an axle to hold the wheel in place while I shape and sand it.

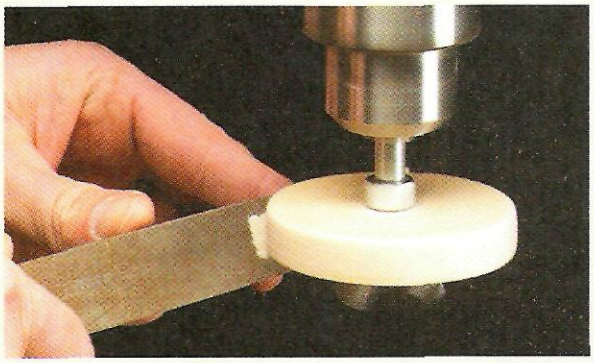

The axle is simply a carriage bolt with the head cut off. The bolt should be the same size as the axle of the wheel you need to shape. (I also made a longer version for shaping thicker wheels.) To act as a stop, I threaded a nut on. Next the bolt can be chucked into the drill press. Then a wheel can be slipped over the bolt and tightened in place with a wing nut, as shown in the drawing.

Now I can quickly and easily round over the edges with a file, as shown in the photo at left. To smooth the wheel, I used some sandpaper wrapped around a piece of scrap.

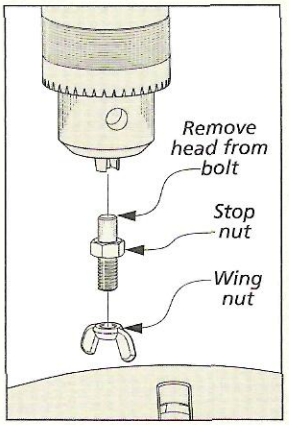

I've found that for best results it helps to set your drill press at a lower speed. When one wheel is finished, all you have to do is unscrew the wing nut and slip another wheel on.

Ron Zega
Agua Dulce, California

PVC Sanding Blocks

For sanding molding and softening edges, I made a pair of sanding blocks out of some PVC pipe, as shown in the drawing below.

One of the blocks is made for sanding concave surfaces and the other handles convex surfaces and edges. The blocks are nothing more than a short piece of PVC (mine were 7" long) with self-adhesive sandpaper stuck on the bottom. To make the convex sanding block, simply cut the PVC in half on the band saw.

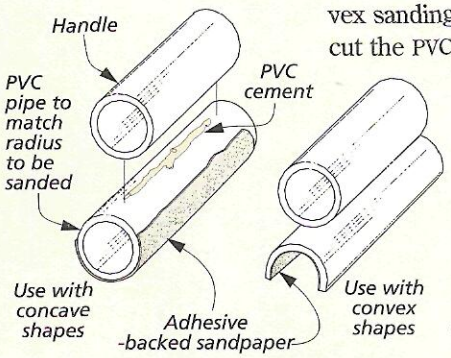

A shorter piece of 1½"-dia. PVC is glued on top to make the blocks easier to hold on to. They're simple to build, so you can make several other sizes in a short time.

▲ *Use the convex sanding block to soften the edges of a workpiece.*

Walt Boyd
Yakima, Washington

SUBMIT YOUR TIPS

If you have an original shop tip, we would like to hear from you and consider publishing your tip in one or more of our publications.

Just write down your tip and mail it to: *Woodsmith,* Tips and Techniques, 2200 Grand Avenue, Des Moines, Iowa 50312. Please include your full name, address, and daytime phone number in case we have any questions. If you would like, FAX it to us at 515-282-6741 or send us an email message at: woodsmith@woodsmith.com. We will pay you up to $200 if we decide to publish your tip.

QUICK TIPS

STICKY SPINDLE PROBLEM

Recently I've discovered a simple way to remove a sticky sanding drum from a stubborn spindle. All you have to do is pop it in the freezer for a few minutes. The rubber spindle will contract just enough for you to slip the drum off.

Dan Millspaw
Corry, Pennsylvania

FIXING LOOSE FASTENERS

I've found that table top fasteners are great for connecting a table top to a frame. But if the groove is a little off, the top can be too loose. To tighten them up, all it takes is to place each fastener in a metal vise and give it a little squeeze.

Eric Oslund
Cape Girardeau, Missouri

SHAMPOO BRUSHES

After painting, I always clean out my paint brushes with mineral spirits. But when I go to use them again, the bristles are stiff and difficult to use. To make them softer, I rubbed in a little conditioning shampoo after cleaning. Now the bristles are just as soft as when the brush was new.

John Fox
Columbus, Indiana

MAKING LEG BLANKS – A SEAMLESS SOLUTION

When you look at an attractive table, what's the first thing that you notice? Well for me the answer is easy — the legs. A great table starts with good looking legs.

So what makes a really distinctive table leg? Part of the answer lies in what you do before you start the cutting and shaping. The key here is something that's often overlooked. To make a really top-notch table leg you need to start with the very best possible leg blank.

The hall table project on page 10 has very graceful, flared legs. And I wanted the grain of the wood and the shape of the leg to work together — not clash. To achieve this, I realized that not just any leg blank would do.

ADD-ON. Take a look at the left picture below and you'll see an easy way to come up with a blank for a flared leg. It saves a fair amount of material to just "add-on" a couple scraps of wood to the bottom of a squared blank. It's simple and it gives you the thickness needed to cut out the curved foot.

But as you can see, this makes a pretty sorry-looking leg. When you cut across a glue line, you're going to see grain changes and color differences. Short of a coat of paint, there's just no way to hide it.

GLUEUP. So how about a full-sized glueup? Three pieces of ¾"-thick stock will give you a blank thick enough for all but the stoutest legs.

But the middle photo shows that you're right back to the same problem. Three separate pieces means two glue joints and at least some color and grain variation. When you go to cut a shaped or tapered leg out of this blank you're bound to cross at least a glue line or two.

SOLID BLANK. The simple solution is to just go out and spend the money for some solid blanks, right? It sure sounds good and I considered it. There wouldn't be any glue ups to mess with and no glue lines to see, and the color would be consistent.

But when I checked it out, a couple drawbacks popped up. The first is that thick blanks cost a lot more money than you might want to part with — as much as forty dollars apiece for a 3"-square blank. I wanted the right look, but didn't want to break the bank.

The right photo below shows the biggest problem with a solid blank. You just won't have a consistent grain pattern on all four faces. On one face you can get straight, quartered grain while the adjacent face has figured, flat grain. When you cut a shaped leg out of a blank like this the grain is surely going to be a distraction — not a complement. A blank like this still wouldn't produce the refined look that I was after.

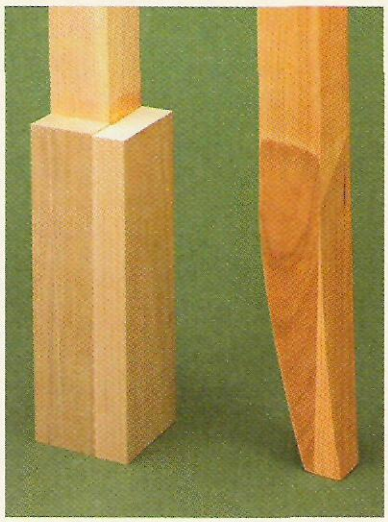

Add-on. *Gluing scraps onto the bottom of a square blank to form a foot leaves too many glue lines.*

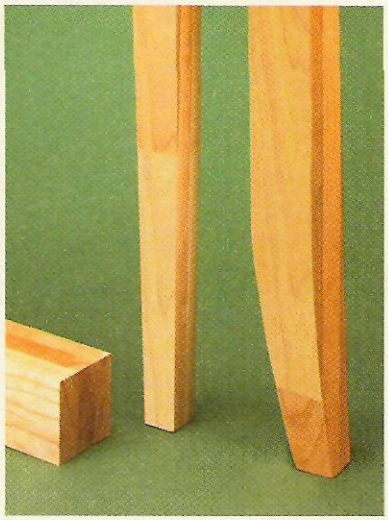

Glued-up Blank. *A three-piece glueup creates the right thickness, but also a lot of color and grain variation.*

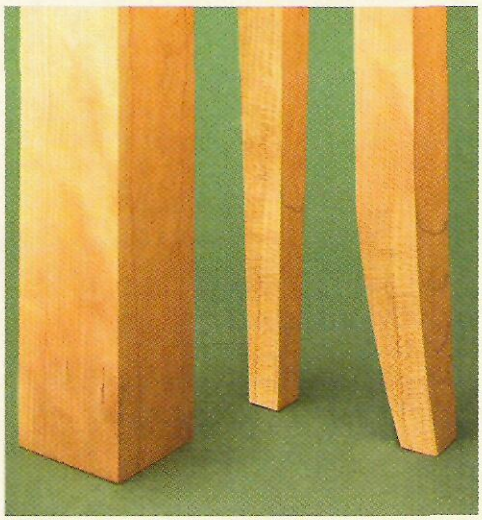

Solid Blank. *A solid blank won't have glue lines or color variation, but each face can have a different grain pattern.*

Mitered Leg Blank

What I wanted for my legs were blanks with no visible glue lines and matching grain on all four faces. Starting from this point, I could make legs that really showed off their shape.

This might sound impossible, but it turns out there's a fairly easy way to make a blank that fits this description. Take a look at the photo at right and you'll get an idea of how this works. With a little careful wood selection, gluing, and cutting, you can end up with a two-piece blank with similar grain on all four faces and an invisible glue line.

As you can see on the end, the glue line runs from corner to corner so it can't be seen on the faces. Even after the leg is shaped, no one will be able to tell that it was made from a two-piece, glued-up blank.

But the real advantage you get from this type of blank is the matching grain. The two halves of the blank are glued up so that the grain on all four faces is a very close match. Just take a look at the large photo at left and you'll see what I mean. The shape of the leg and the grain pattern work together to make a great-looking leg.

TWO HALVES. Getting this look takes a little extra work, but it isn't difficult. Basically, you start with an oversized, glued-up piece and then cut a square out of it "on the diagonal" to get the finished blank. The key to getting the right look is in how you match the two halves of the oversized piece. The rest is just simple gluing and table saw work.

For the oversized piece you need two pieces of 1¾"-thick stock, 3½" wide. You want to end up with a rough blank that's 3½" square.

Take a look at Fig. 1, and you'll see the grain orientation you're shooting for. This part of the process is pretty important. As you can see the rings on the ends of the two halves should form gentle arcs across the width of the pieces. I had to pick and choose the lumber carefully to get it right, but the extra effort really paid off.

LAYOUT. After the oversized piece is glued up, check it to make sure it's square. (This is important later on.) Then you can lay out the shape of the finished blank on one end. A hardboard pattern cut to the size of the finished blank does the job. Just trace the pattern on the ends of the rough blanks as shown in Fig. 1a. You want to center the pattern in the oversized piece and the corners should be right on the glue line.

FINISHED BLANK. Now cutting the finished blank is straightforward. If you just follow the layout lines, you can't go wrong. With the table saw blade set at 45°, the first cut is made as shown in Fig. 2. As you can see, the glue line is vertical. And you can just sneak up on the layout line by adjusting the fence.

Next turn the rough blank 90° to cut the second face as shown in Fig. 2a. What you're looking for here is the glue line to fall right on the corner of the finished blank.

The final two faces should be routine. Figs. 3 and 3a show you what to do here. With the saw blade set at 90° and the fence adjusted to the finished width of the blank, the glue line will fall right on the money.

That's it. Now you've got the perfect blank for any leg.

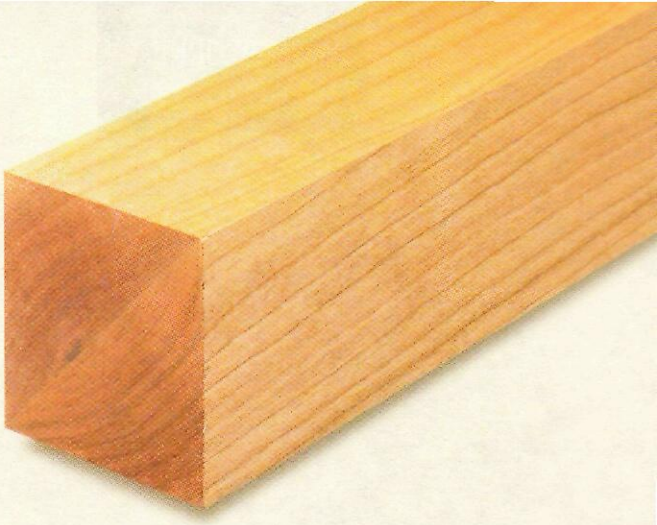

▲ *With a "mitered" leg blank you'll have an invisible glue line and matching grain on all four faces.*

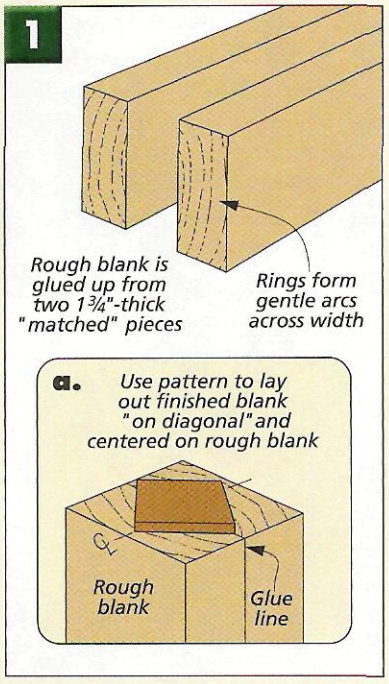

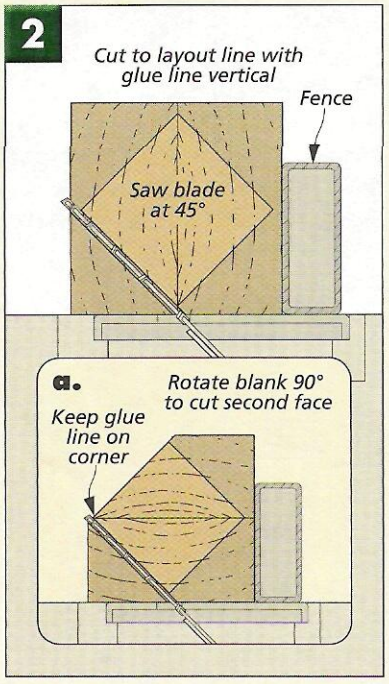

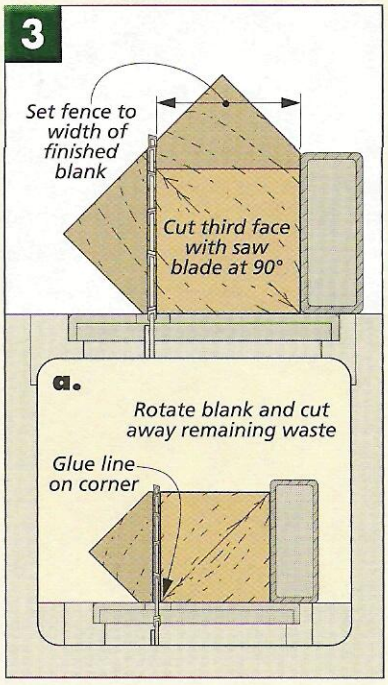

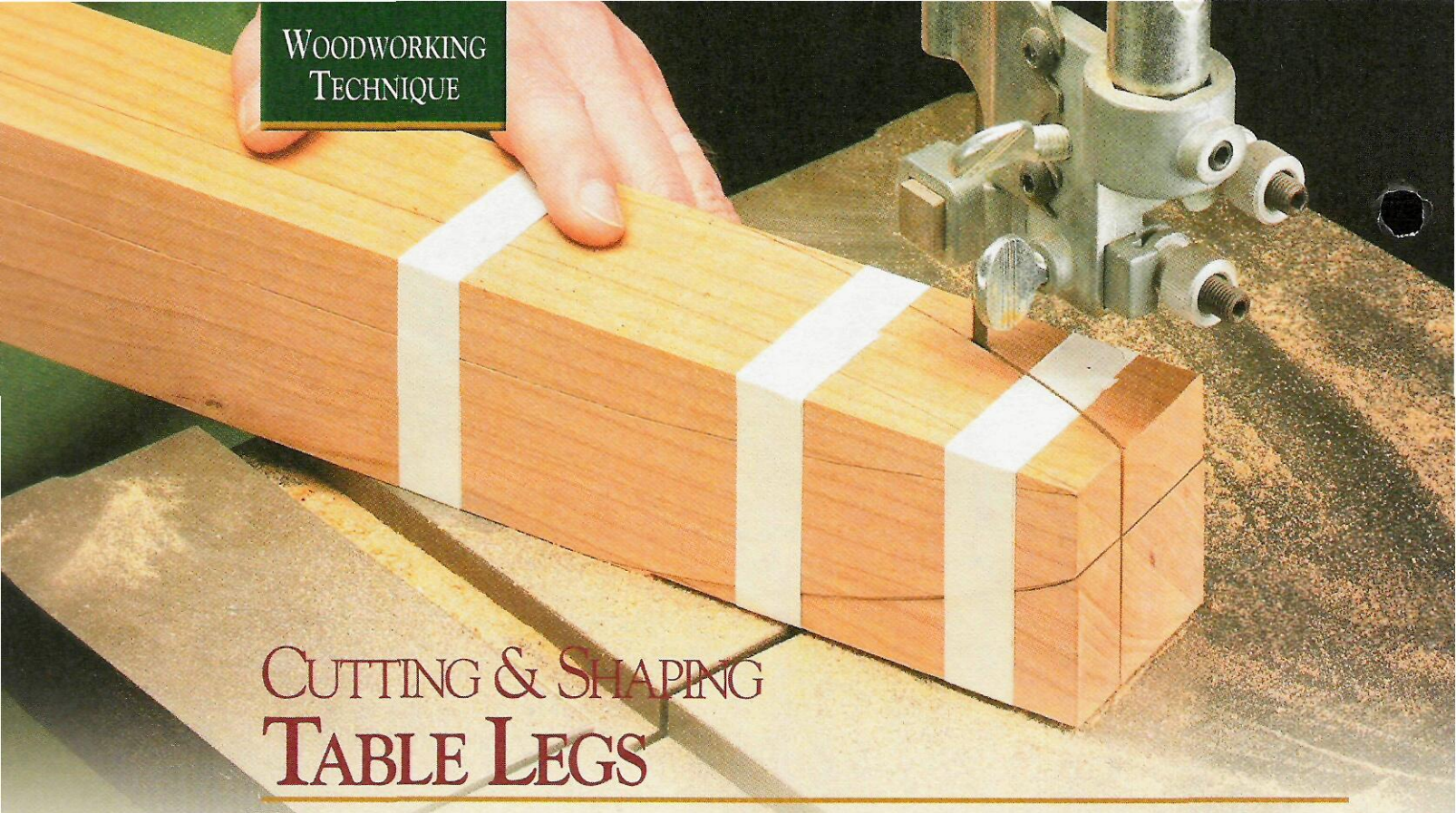

CUTTING & SHAPING TABLE LEGS

Anytime you tackle a table project with shaped legs (like the flared legs for the hall table project) you run into some special challenges. What kind of blank do you use? How do you do the shaping? And how do you make them consistent? Well fortunately, these are only minor challenges. (Making the blanks is covered on pages 6 and 7.) And with a few simple techniques, shaping table legs becomes pretty easy.

THE BLANK. The flared legs that I made for the hall table start out as 2¼" square blanks. And like any leg, the first thing you want to do is look over the blanks and find the two best faces to put "forward" (to the outside). On the flared leg this takes a little bit of guesswork. The outside faces will end up being cut away to form the curve of the foot, but you can make a good guess.

And now remember, with any table leg you're going to have some joinery. So next I checked the two inside faces of each leg to make sure they were square. These are the faces that will be mortised for the apron, so they need to be true.

PATTERN. It's always a good idea to start with a pattern when making shaped legs. For the flared legs, this is easy. The sweep of the foot is identical in both directions, so you'll only need one pattern (you can just flip it). And since the upper section is perfectly straight, my pattern just covers the foot. The full-size pattern on page 9 gives you the idea. I made it out of ¼" plywood so it would be flexible. (This helps later.)

ROUGH CUT. After tracing the pattern onto both outside faces as shown in Fig. 1, I took the blanks over to the band saw. This is where the real work starts.

The inside of each leg only needs to be cut at the bottom where the foot sweeps outward. So I started by cutting the inside of the foot on one face. Next, the opposite, long outside face was cut, as shown in Fig. 2.

But now there's a small problem. The pattern lines I traced on the second side are now laying on the shop floor. Whether you're cutting a

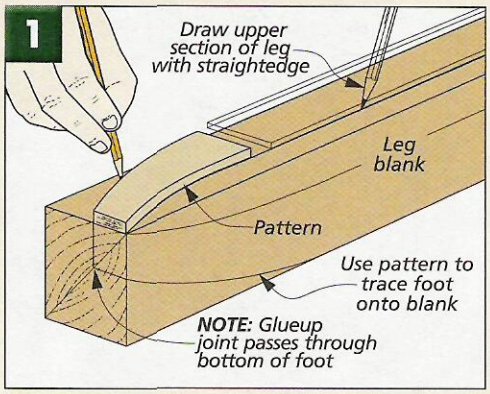

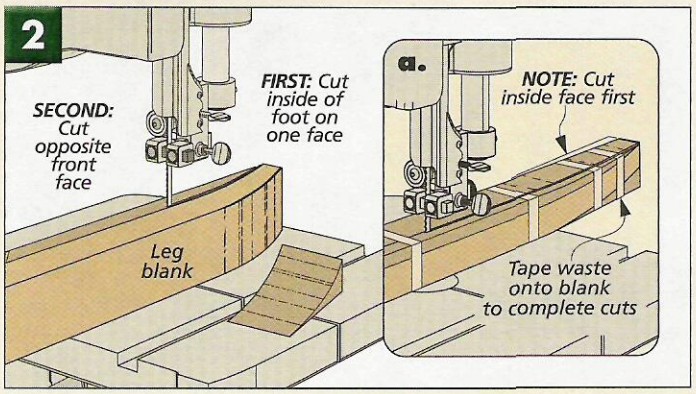

flared leg or any other shape, the solution is simple. Tape the waste pieces back in place and rough out the other two sides (Fig. 2a).

CLEANUP. The band saw will do the rough stuff quickly, but it leaves you with a fair amount of cleanup work. On the flared legs, I took a different approach on each section to get this task done as easily as possible.

UPPER LEG. The upper section of the leg is where I started. Normally I'd think table saw or jointer to create a smooth, straight leg. But not here — the curve of the foot gets in the way. So I turned to a long, flush trim bit on the router table to do the job.

If you take a look at Fig. 3, you can see how to make a template to guide the router bit. This can be a pretty easy way to smooth a straight line or a curve. All it takes are a few pieces of carpet tape to hold the template in place. But you want to make sure it won't slip.

The goal here is to get a straight, smooth face, so I just took a couple light passes. You don't want to apply much pressure against the bit on the first pass. But on my final pass, I made sure the template was snug against the bearing so I'd get a long, smooth cut (Fig. 4). Just stay away from the curves. When the first face is smooth, just pop the template off, reposition it, and start work on the second face (Fig. 4a).

FOOT. With a smooth upper leg, you need a foot to match. The 2" flush trim bit won't quite reach here, so I turned to a 3"-dia. sanding drum mounted on the drill press to accomplish this job (Figs. 5 and 5a).

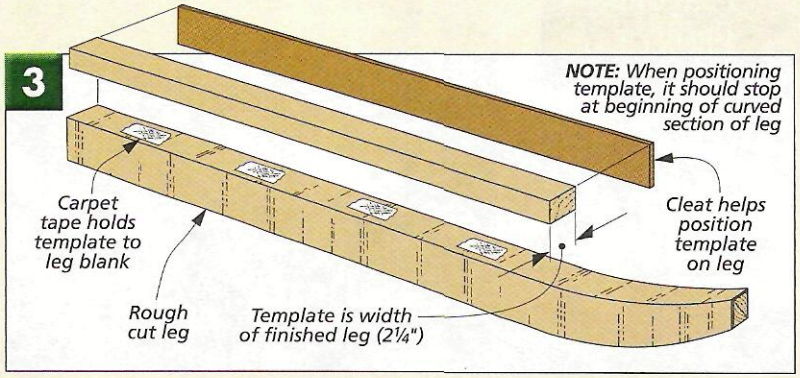

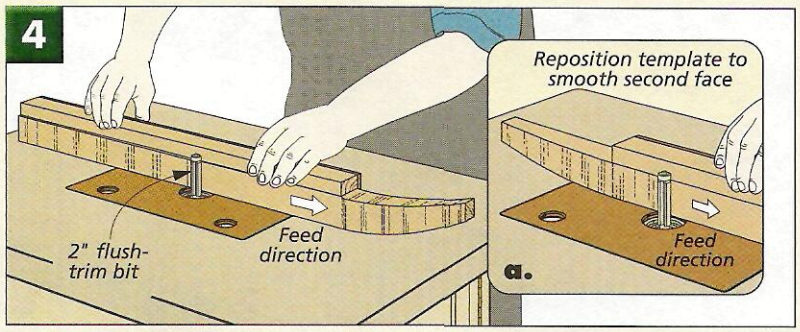

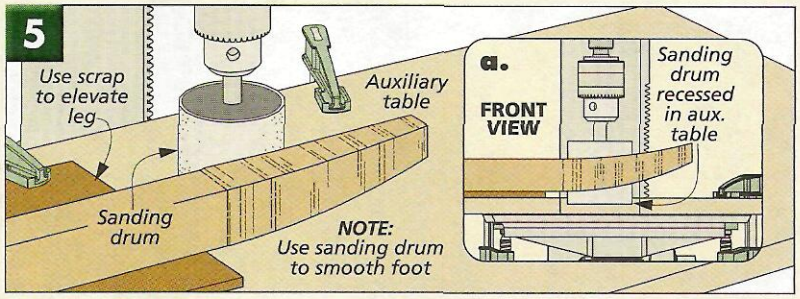

But before you start sanding, retrace the pattern onto the rough-cut foot. (This is where the flexible pattern comes in handy.) It helps to see what you're shooting for.

You want to concentrate on getting a smooth transition from the upper leg to the curved foot. These two sections should flow together smoothly. You can use your fingers to tell you when it's just right.

Be sure to take your time here. The graceful sweep of the legs will be one of the focal points of the table, so you want to get it right. And don't worry about getting a perfect match between the legs. Any slight differences won't be noticed. Just make each individual leg look good.

Once the curves look right, you can switch to hand sanding to give the leg its final surface. W

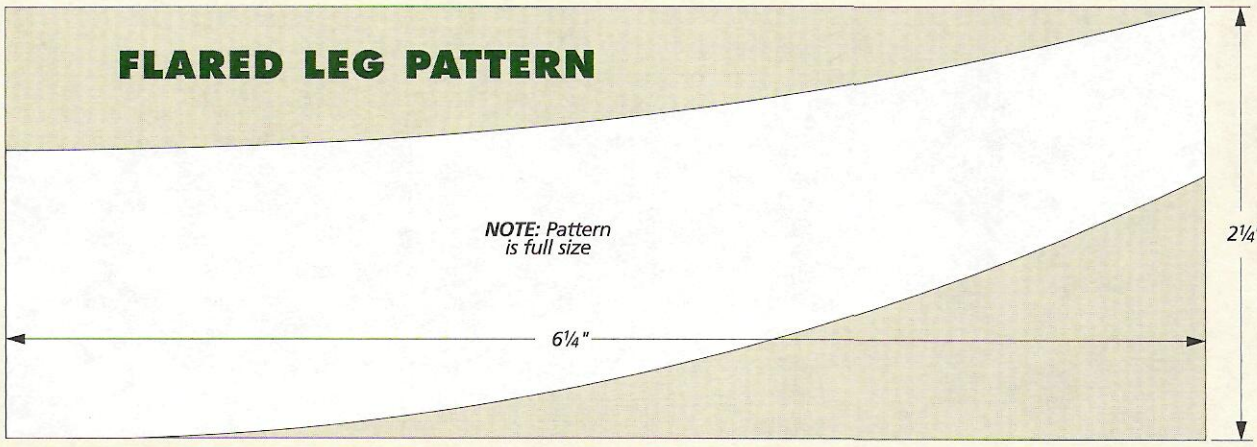

HALL TABLE

You'll want to set this beautiful hall table in a prominent spot with lots of elbow room. Because it's sure to draw a crowd of admirers.

It's hard to say which element of this table excites me most. As a woodworker, I'm interested in the techniques involved in making the graceful flared legs. Without any visible joint lines, they look like they're cut from a large solid blank (even though they really aren't).

You might think the legs would be difficult to shape. But this isn't the case. With just the band saw, the router table, and a little sanding, it's pretty straightforward. And there's a bonus. You can easily apply these same techniques to your other projects.

From the standpoint of sheer beauty and elegance, it's the contrast between the rich cherry and the curly maple veneer that draws my attention. This gives the table a look that will make it stand out anywhere. And the best part is, it wasn't difficult. I just used a couple different veneering techniques and everything went "smoothly."

There is one thing that I am certain of. Whether you build this table for the woodworking challenges it offers, or because of the beauty of the finished project, you won't be disappointed.

Construction Details

OVERALL DIMENSIONS:
45"L x 15"W x 29"H

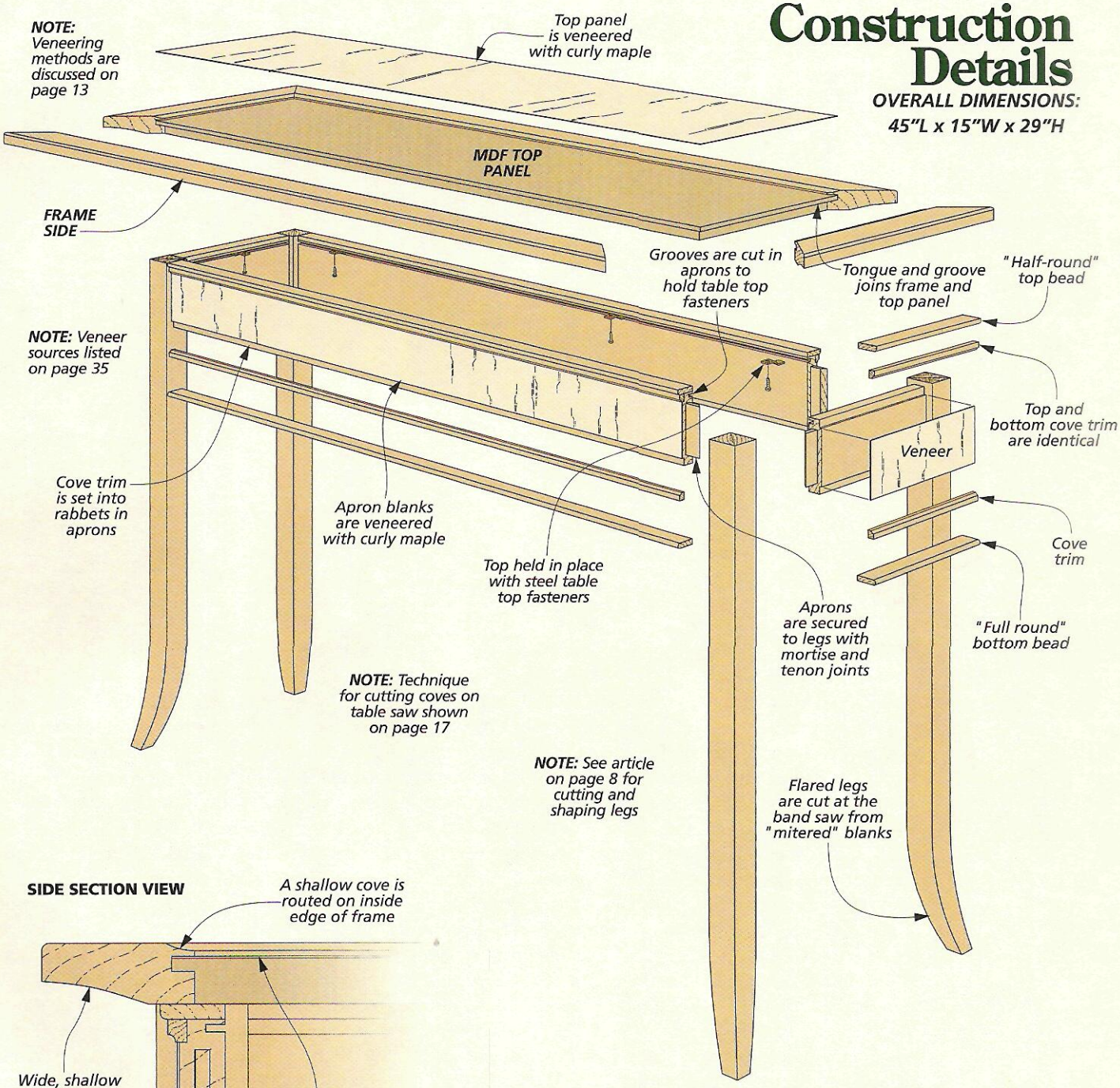

SIDE SECTION VIEW

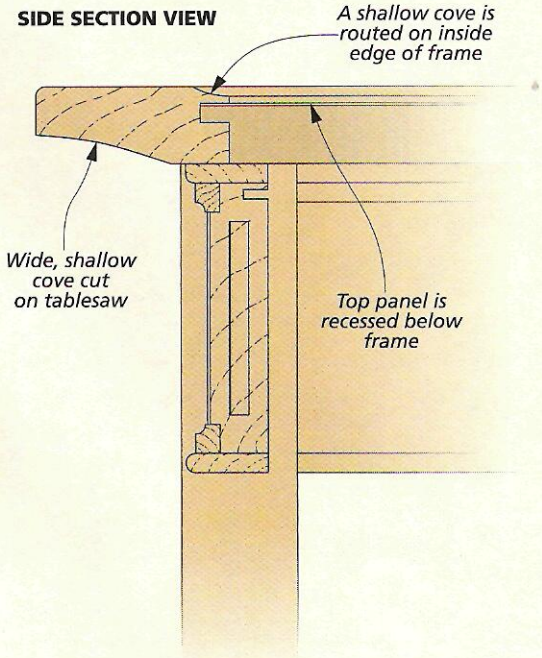

TOP SECTION VIEW

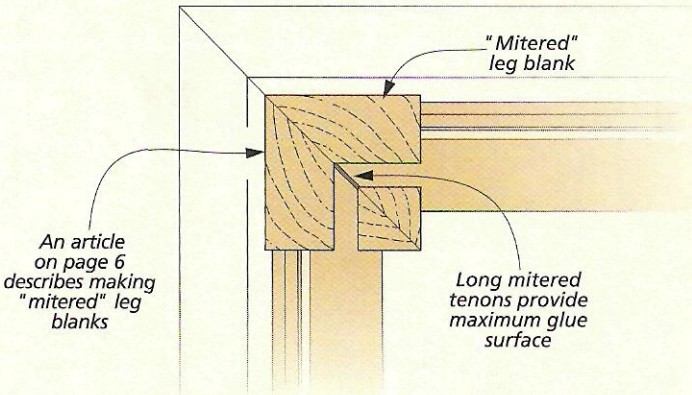

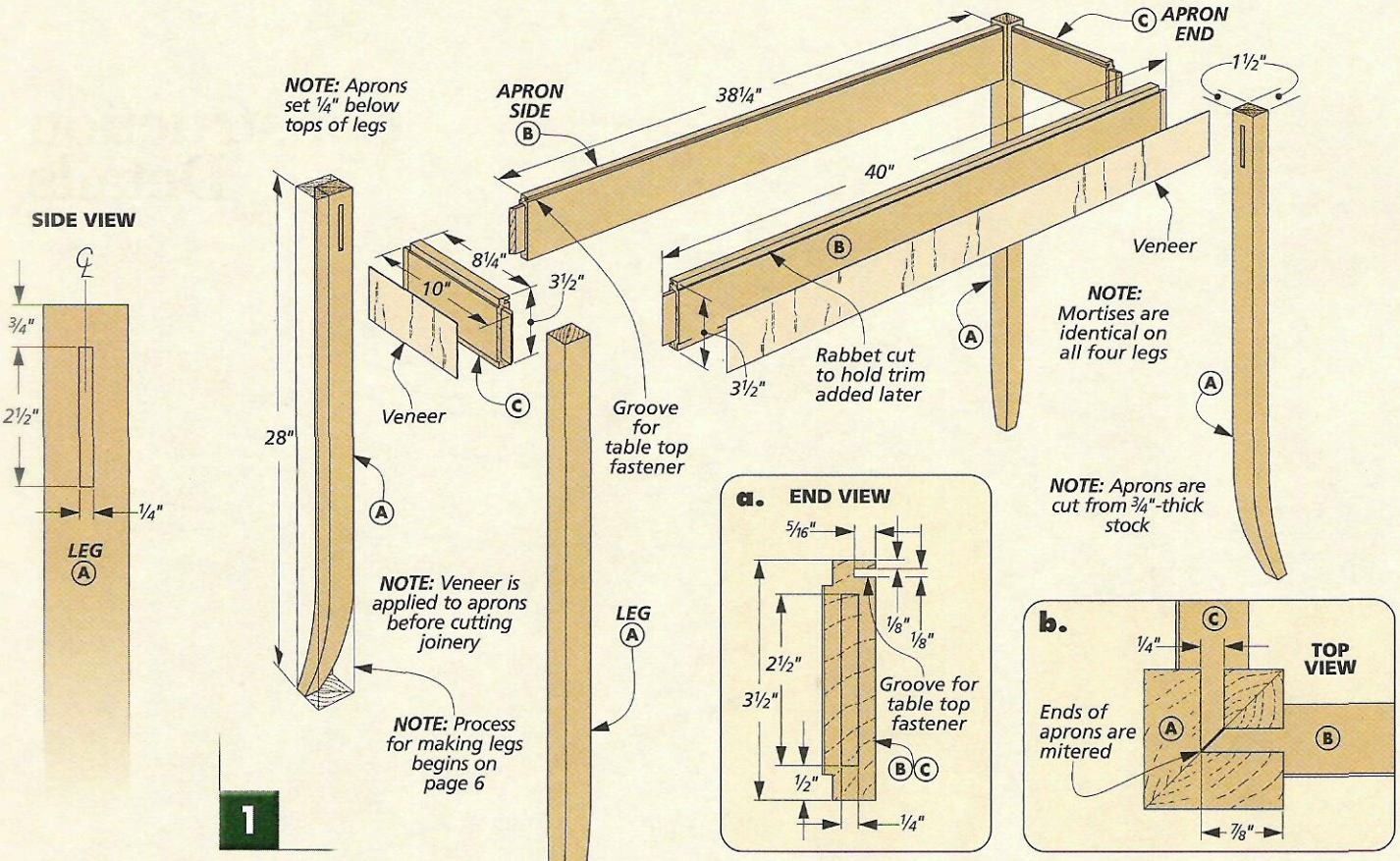

1

Frame

After using a few simple techniques starting on page 6 to make four flared *legs (A)*, you can start working on the table frame. When you take a look at Fig. 1, you'll see there's nothing too unusual here.

LEG MORTISES. The leg mortises are a good place to start. The legs are all identical (a centered mortise on each inside face), so the layout is pretty easy. The side view above shows you what to do here.

After the layout, cutting the mortises is straightforward. Fig. 2 gives you the idea. First, drill a series of overlapping holes, and then follow up with a chisel to clean out the waste. Just keep to the layout lines and work carefully. Fig. 1b shows how the two mortises meet in the leg. This makes it easy to gauge the depth and get a clean bottom.

APRONS. When the leg mortises are completed, the aprons come next. At first glance (page 11), the finished aprons look complicated — veneered blanks with multiple moldings that stand proud. But when you break it down in "pieces," it's pretty manageable. First, I concentrated on making and joining the veneered aprons. And I simplified things by adding the moldings after glueup.

I started by cutting the *apron sides (B)* and *apron ends (C)* to size from 3/4"-thick stock. Next, with just yellow glue and clamps, the veneer was applied (see page 13).

TENONS & RABBETS. After veneering, the blanks are ready for the centered 1/4" tenons. Fig. 1a shows the goal and a dado blade on the table saw will handle the job. When you get a snug fit, the tenons are finished up with a miter cut at each end (Fig. 1b). I cut them just a hair short to leave room for glue.

With the tenons fitted, next come the rabbets that will hold the small cove trim added later. Figs. 3 and 3a tell the story here.

There's one last detail before assembly. A groove cut along the inside edge of the aprons holds the table top fasteners (Fig. 1a).

ASSEMBLY. When you glue up the frame, just be sure to keep the aprons down 1/4" from the top of the legs to allow for the bead trim added later. I made the assembly easy by first gluing up the two long sides and then adding the short ends.

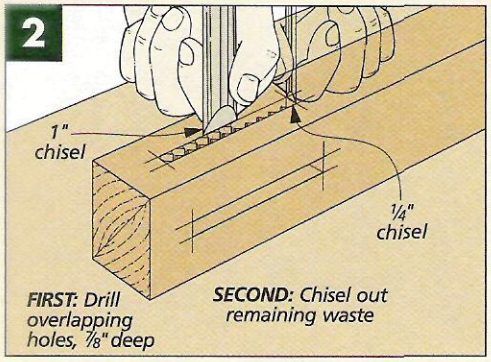

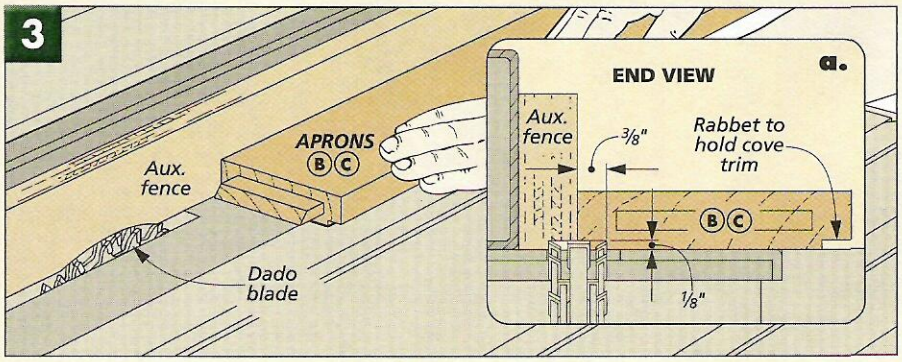

Veneering Techniques

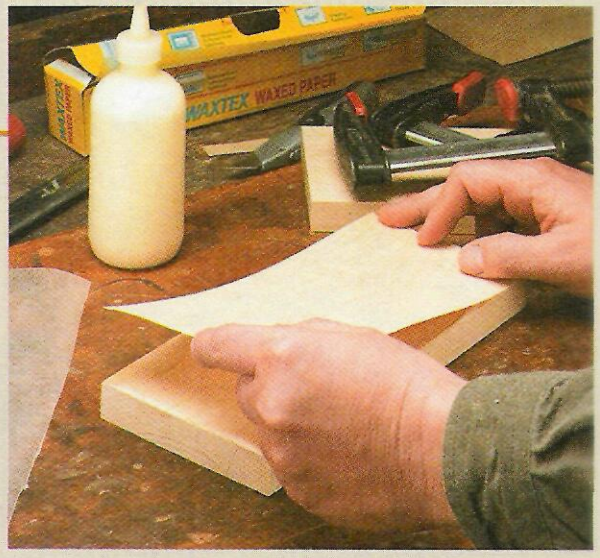

For some reason veneer has gotten a bad reputation. On one hand it's thought of as being cheap and artificial. From a woodworking standpoint, veneering is sometimes considered too hard for the average woodworker.

But in my experience, both these attitudes are misguided. The beautiful curly maple veneer I used on this table says anything but cheap. I couldn't have achieved the same look without veneer. (See page 35 for sources and more information.)

And veneering can be made easier if you use different techniques for small blanks and large panels. That's what I did on the hall table, and both methods worked great.

APRONS. For the aprons I took a more traditional approach — just yellow glue and clamps. The key to this method is using the right amount of glue and then applying good, even pressure.

GLUE. The same yellow glue used for joinery works fine for veneering. You always want to spread the glue onto the panel, not on the veneer. The moisture in the glue would cause the veneer to curl and become pretty much unworkable.

When I spread glue on a panel, I always try to err on the side of too much rather than not enough. You're looking for a nice, even coat.

CLAMPS. You can never use too many clamps. It doesn't matter what kind you have, just use plenty of them to get enough pressure.

I ended up clamping the apron blanks face to face in pairs with waxed paper in between. This way each blank acts as a caul for the other blank and flattens the veneer.

SQUEEZE-OUT. A good amount of squeeze-out tells you that you've got the right amount of glue and enough pressure. When you remove the clamps, you'll probably notice spots of glue that have been forced through the pores of the thin veneer. Don't worry, this will clean off with a scraper or sandpaper. W

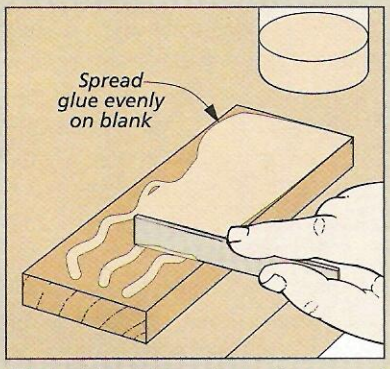

1 *A thin stick works well to spread the yellow glue on the face of the apron blanks. Just try to avoid thick puddles and any dry spots.*

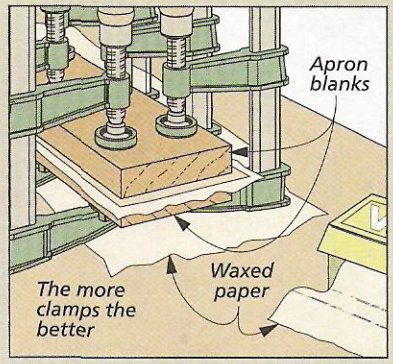

2 *With the veneer in place, lay the blanks face to face, separated by a piece of waxed paper. Use enough clamps to get good squeeze-out.*

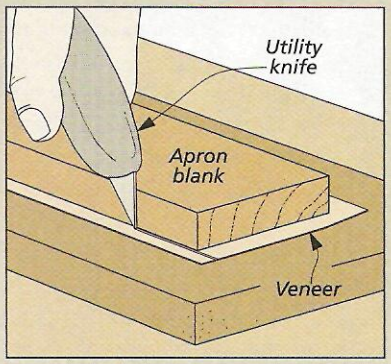

3 *When the glue has dried, you can use a sharp utility knife to trim the excess veneer (and glue) from the edges of the apron blanks.*

LARGE PANEL VENEERING

It's hard to get enough clamping pressure across a wide panel when you veneer with yellow glue. So to veneer the top panel I used a different adhesive — contact cement.

Contact cement makes veneering pretty easy. The key is that when the cement dries, it sticks to itself. So the process is as simple as coating both surfaces, letting the contact cement dry, and then pressing the pieces together.

Start by brushing on enough contact cement to leave a glossy surface (at least two coats). When the cement has a slightly tacky feel, position the veneer over the panel supported by dowels. Now start at one end, removing the dowels and "rolling" the veneer to the panel. When the veneer is in place, I use a wood block and a hammer to "pound" the panel and make sure the veneer is stuck.

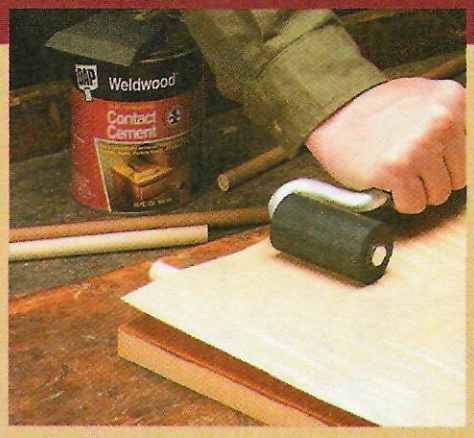

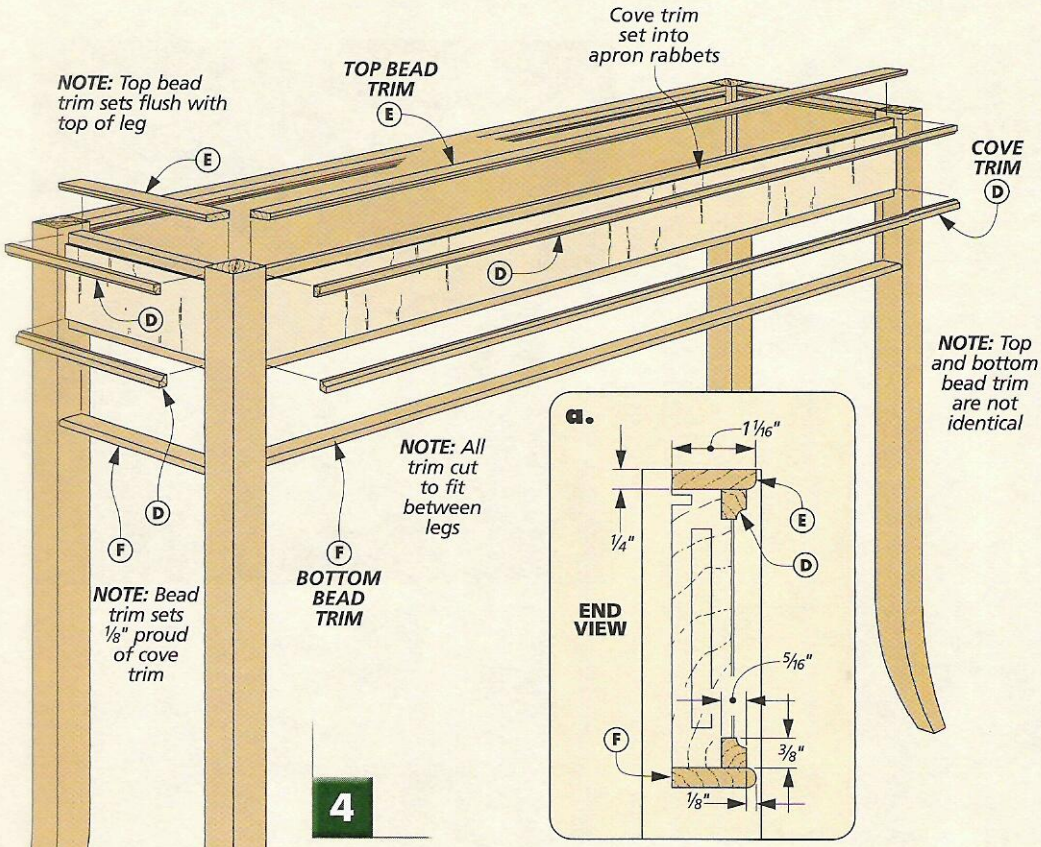

4

TRIM TIP

Before you can add the bead trim, you'll probably need to do a little work on the top and bottom edges of the apron. You want to get rid of any squeeze-out left from adding the cove trim and create a nice flat surface. This might just take a little sanding, but don't be afraid to use a scraper, a chisel or even a block plane to do the job.

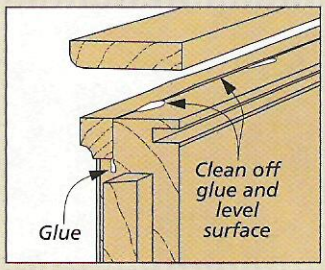

Apron Trim

With the frame assembled I could start making and adding the trim to the aprons. Now that I have a "fixed" space between the legs, the fitting and gluing is an easier job.

FOUR LAYERS. As you can see in Fig. 4, each apron section has four pieces of trim — a top and bottom cove, and a top and bottom bead. When you add them all together, they really give some nice depth and detail to the apron.

COVE MOLDING. The best place to start is with the *cove trim (D)*. The top and bottom cove are identical and making them is an easy task with a 1/4" core box bit. But I always try to avoid running really small pieces through the router table. It's safer and you'll get a cleaner cut with a larger blank. So I started by cutting a 1" by 1 1/4" blank and "ganged up" on the cove trim. If you take a look at Figs. 5 and 5a, you'll see the process. You can learn more about this on page 23.

After the cove is made, fitting it to the frame just takes a little care. You want the pieces to fit nice and snug between the legs.

Now the rabbets that you cut in the apron make adding the cove pieces to the frame pretty simple. With the pieces cut to length, I just put glue on the face of the rabbet (not the shoulder) and pressed the trim into place. All you'll need are a few spring clamps or some tape to hold it while the glue dries.

BEAD MOLDING. Making and adding the *top bead trim (E)* and *bottom bead trim (F)* will complete the frame. And the nice thing is, you use the same process for both pieces.

The two bead trims are a slightly different but you can use the same 1/8" roundover bit to make them. I started with an oversized blank — 1/4" thick by 2 1/2" wide — so I could make both pieces from one blank. Figs. 6 and 6a show you how to do this. A pass on each face creates the bottom bead but the top bead only gets a single pass (Fig. 6a).

After ripping the trim to width, the fitting and gluing is similar to the cove trim. First, get a good, tight fit between the legs. And then to save a little time, you can glue and clamp the top and bottom bead of each apron section at the same time. The important thing is to have the right overhang. The beads should sit 1/8" proud of the cove (Fig. 4a).

5

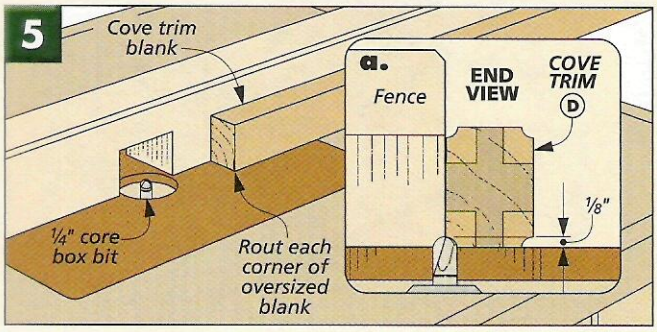

6

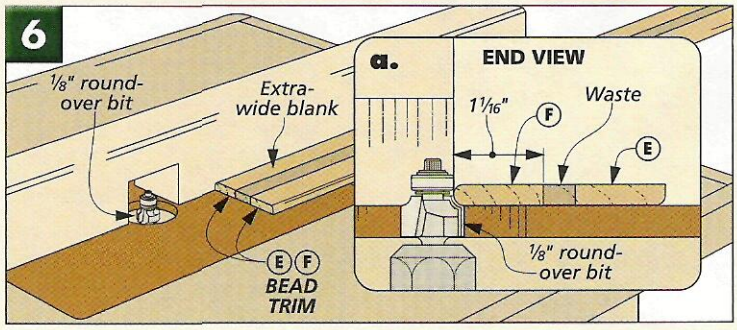

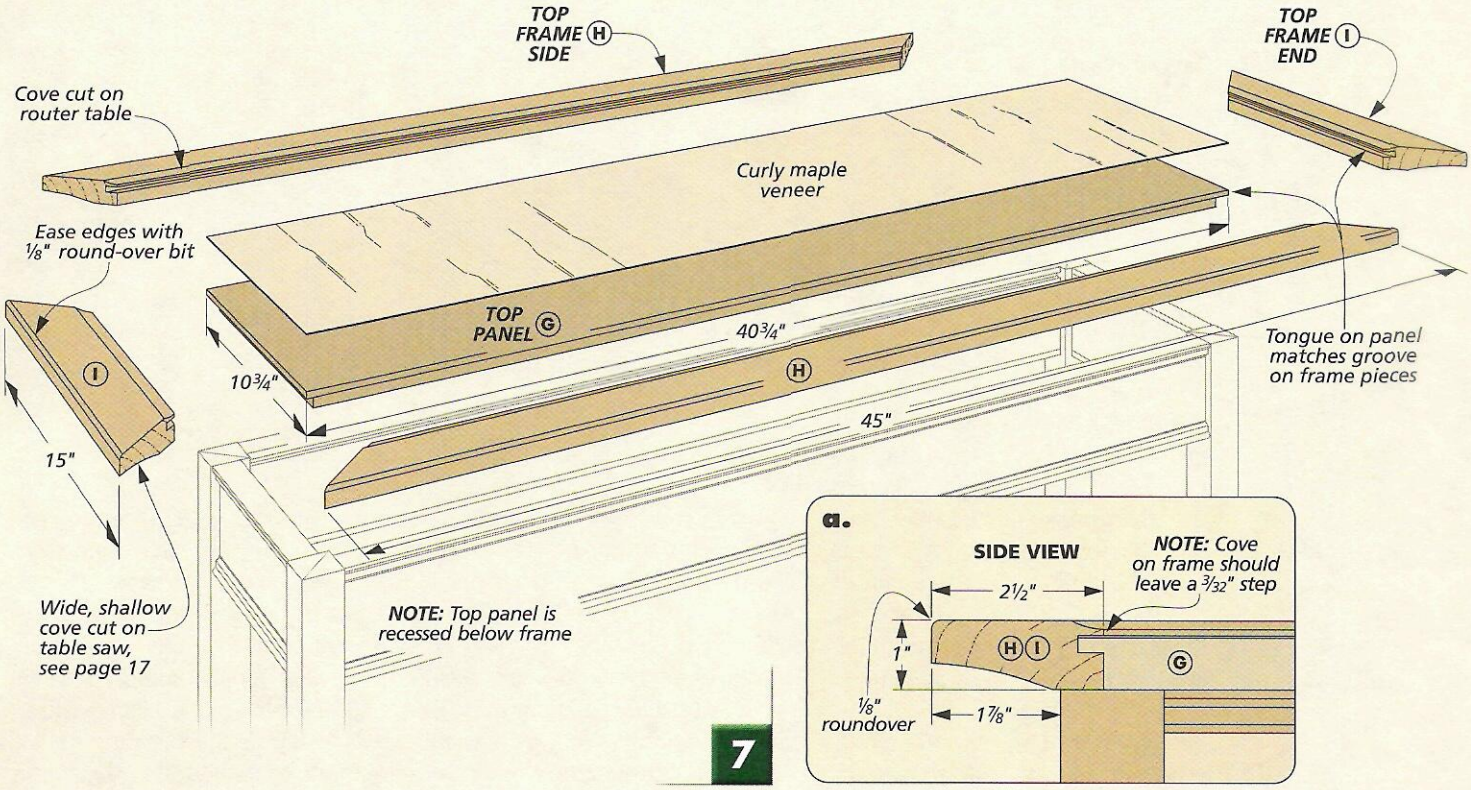

Top

With the table frame completed, all the table needs is a top. If you take a look at Fig. 7, you'll see that the top is just a veneered MDF panel with a mitered wood frame. But I added a couple twists to the design. The panel is recessed below the frame. This allows a shallow cove to be cut on the inside edge of the frame that sweeps down to the flat panel. And I used the extra-wide overhang of the top to put a shallow cove on the underside.

TOP PANEL. There's not too much to making the veneered top panel. With the *top panel (G)* cut to size from 3/4" MDF, I first applied the curly maple veneer (see page 13). Before you go any further, you want to do most of your sanding so the panel is at its final thickness when you cut the joinery. Finally, a rabbet cut on the underside of the panel, as shown in Figs. 8 and 8a, readies it for the frame. This just creates a 1/4"-thick tongue that will fit in a groove cut on the frame pieces.

FRAME PIECES. With the top panel completed, the next step is to make the frame pieces. These have a fair amount of detail (two coves and a groove), but nothing tricky.

Start by cutting an oversized (about 6" wide) blank to rough length. The oversized blank just makes the next step (cutting a "table saw" cove) a little steadier.

BOTTOM COVE. The wide, shallow cove on the bottom of the frame pieces gives the top a little flare to match the flare of the legs. And the process for cutting this cove on the table saw is surprisingly easy. The article on page 17 gives away the "secret." After the coves are cut and sanded, two *frame sides (H)* and two *frame ends (I)* can be ripped to final width from the blank.

INSIDE COVE. Next I went to the router table to cut the cove on the inside top edge of the frame pieces. As you can see in Figs. 9 and 9a, a 1/2"-rad. cove bit will do this job.

But the important thing is to watch the depth. This cove should only be 1/8" deep. When the panel and frame are assembled, you want to have a short step up (about 3/32")

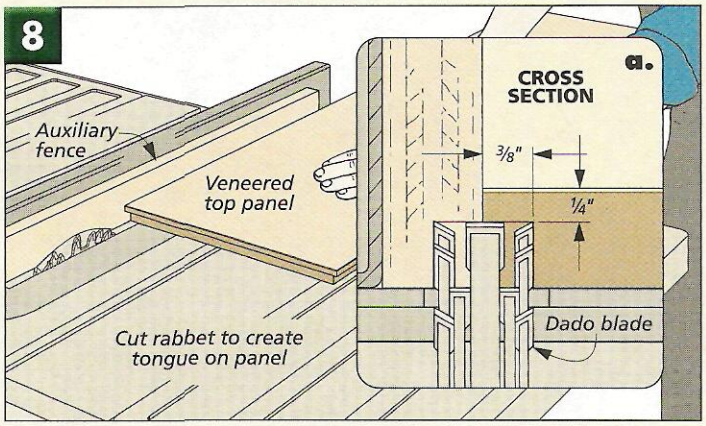

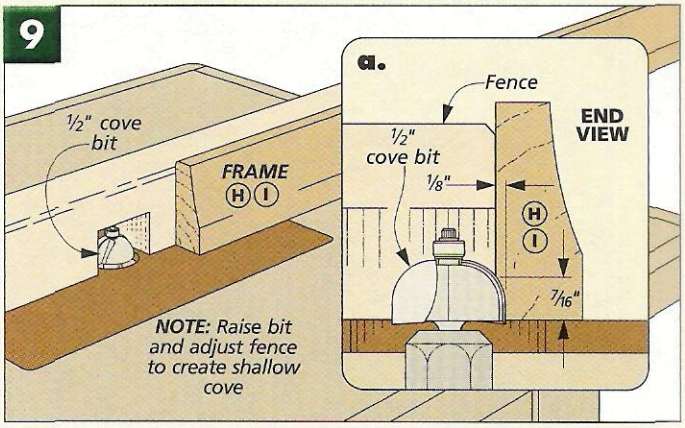

Top CONTINUED

from the panel to the bottom of the cove as shown in Fig. 7a on page 15.

And finally before leaving the router table, I knocked off the sharp outside edge of the frame pieces with a 1/8" round-over bit (Fig. 7a).

GROOVE. Now all that's left to complete the frame pieces is to cut a groove to match the tongue on the top panel. The groove should be positioned so the frame and the panel will be flush across the bottom. Figs. 10 and 10a show how to do this. Just take multiple passes on the table saw, adjusting the fence in between, until you have a snug fit.

MITERS. After the grooves are cut, the frame pieces are ready to miter around the panel. I always like to work carefully at this point. The mitered frame is going to be pretty prominent, so you want to take the time to get good, tight corners.

Take a look at the photo below (and the article on page 28) to see how you can fine tune the fit of a miter. Using a shop-built "shooting board" with a sharp bench plane, you can slowly "shave" the miters to achieve a perfect fit.

I like to start mitering a frame to a panel by carefully fitting one corner and then working around the panel. First, you cut matching miters on one side piece and an end piece and clamp them in place on the panel to check the fit of the joint. When you're satisfied with the first corner, move to the next, and then work your way around the panel.

Once all four of the frame pieces are mitered, they can be glued in place. The tongue and groove joint makes the assembly a little easier.

Now after a little sanding the top is ready to be added to the frame. The steel table top fasteners shown in Fig. 11 fit in the groove cut in the apron and are screwed to the top.

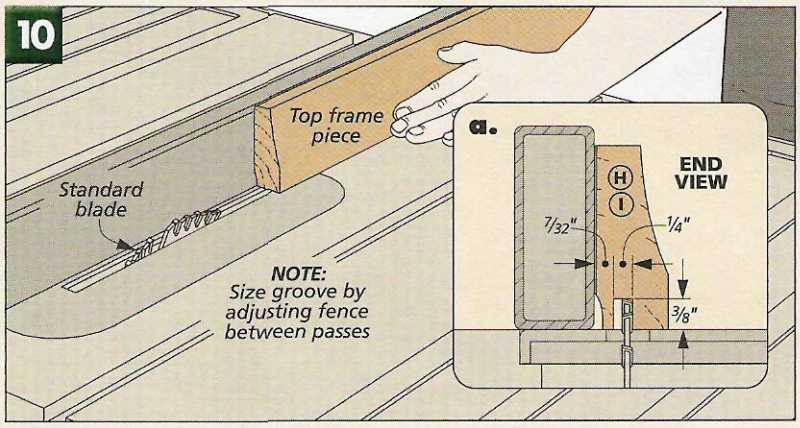

Check out the article on page 28 to learn how to build and use a miter shooting board.

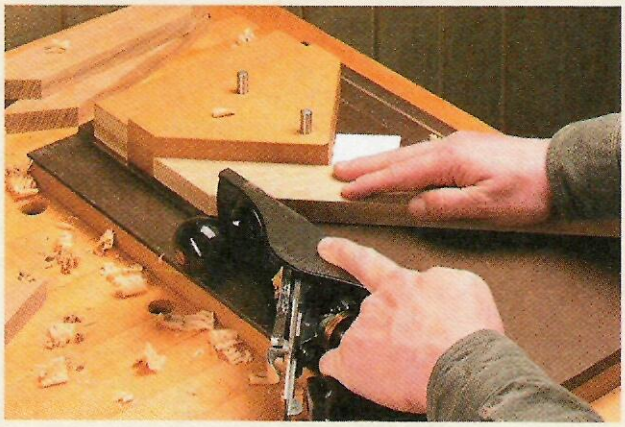

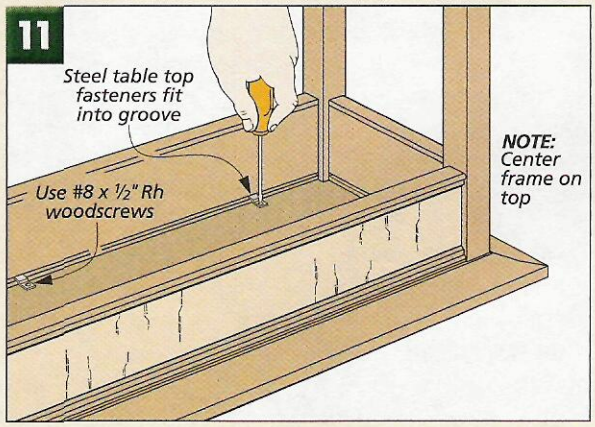

MATERIALS, SUPPLIES, & CUTTING DIAGRAM

A	Legs (4)	2¼ x 2¼ - 28
B	Apron Sides (2)	¾ x 3½ - 40
C	Apron Ends (2)	¾ x 3½ - 10
D	Cove Trim	5/16 x ⅜ - 192 rgh.
E	Top Bead Trim	¼ x 1 1/16 - 96 rgh.
F	Btm. Bead Trim	¼ x 1 1/16 - 96 rgh.
G	Top Panel (1)	¾ MDF - 10¾ x 40¾
H	Top Frame Sides (2)	1 x 2½ - 45
I	Top Frame Ends (2)	1 x 2½ - 15

- (8) Steel Table Top Fasteners
- (8) #8 x ½" Rh Woodscrews
- (1) 12" x 96" Veneer (rgh.)

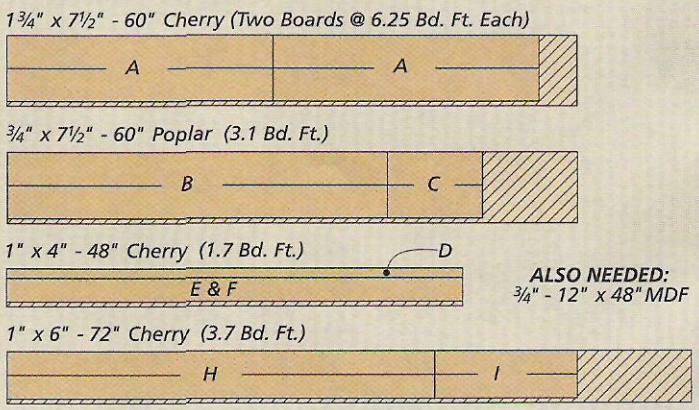

ALSO NEEDED:
¾" - 12" x 48" MDF

A New Angle On Cove Molding

I wanted to find a way to lighten the look of the 1"-thick frame capturing the center panel of the hall table. After a little thought, I settled on cutting a wide, shallow cove on the underside of the frame pieces (photo at right).

THE PROCESS. Normally when cutting a cove on the table saw, you use two fences clamped at an angle on either side of the blade. This allows you to cut a deep cove through the center of a blank. The setup takes a little effort, but the cut isn't difficult.

But the cove that I wanted was unique — wide and shallow and "running out" on one edge of the workpiece. I needed a slightly different technique to get what I wanted.

With this method I used only one guide fence. And instead of clamping the board at an angle, my guide was perpendicular to the blade to create a wide, 5"-radius cove.

Still unsure? Figs. 3 and 3b shows how this works. When you make shallow passes, the "set" of the saw teeth cuts away the wood before the blade body gets in the way.

THE COVE. A look at Fig. 3a shows what you want — a cove that's 3/8" deep and 1 3/4" wide. I started by cutting a 1"-thick oversized blank. You'll get all four frame pieces from one blank. Plus a wider blank has more flat surface to steady it as you feed it through the saw (Fig. 3).

THE SETUP. The first step is to set the auxiliary fence. To do this, raise the blade to 3/8" (I used a combination blade) and mark where the front of the blade exits the table. Then measure back 1 3/4" and mark the fence line (Fig. 1).

Now just lower the blade, put the auxiliary fence in place and clamp it down on your mark. As you can see in Fig. 2, I used the miter gauge to square the fence to the blade.

THE CUT. Once the fence is in place, the key to getting a smooth cut is to make shallow passes. Figs. 3 and 3a show the sequence. I cut about 1/16" at a time using a slow feed rate. If the saw bogs down, just slow the feed rate or lower the blade a little bit. Slow, shallow passes will give you a smoother cut with less sanding later. A depth mark on the fence shows when you've reached the full 3/8". But I stopped shy of the mark to leave some "room" for sanding. A profiled sanding block is the ticket for this job (right margin).

Woodsmith GO ON-LINE EXTRAS

Learn more about making a profiled sanding block and the technique for cutting coves on the table saw on our web site:

Woodsmith.com

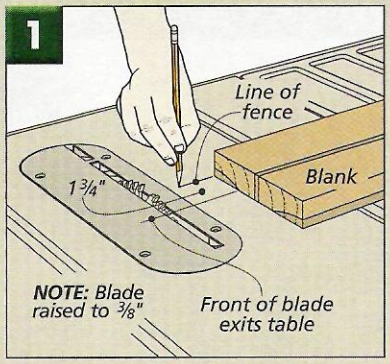

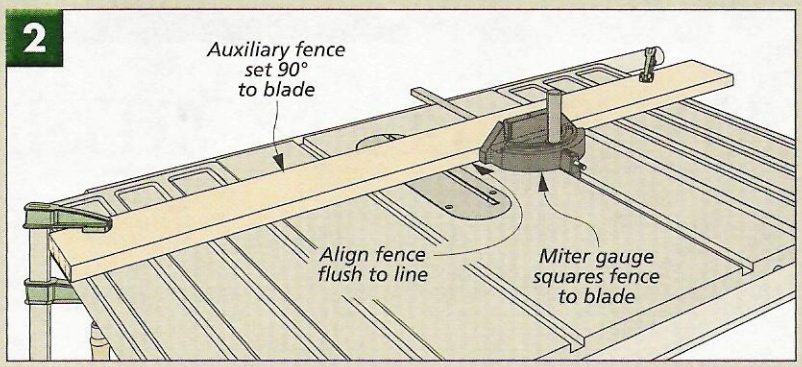

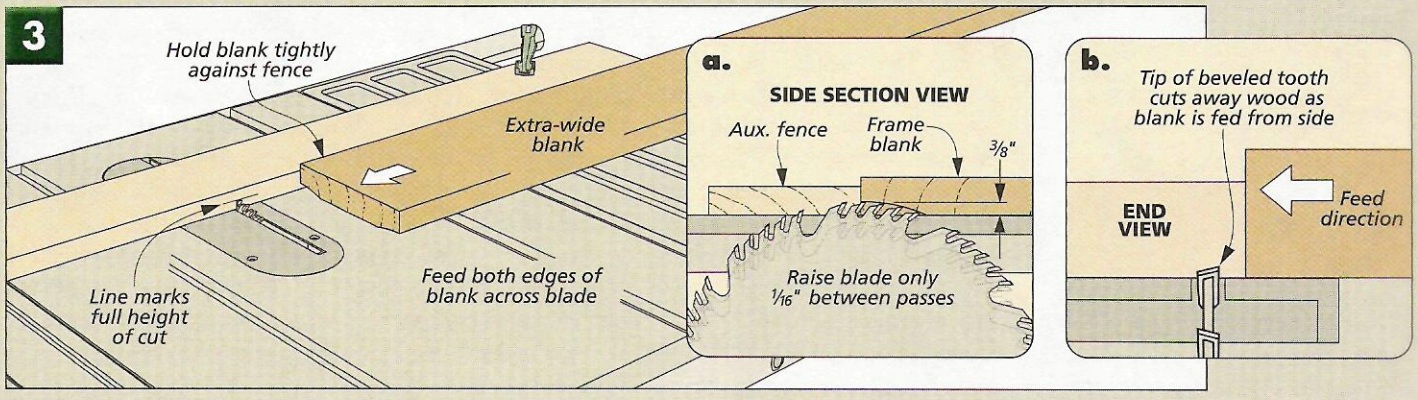

ADJUSTABLE MORTISING JIG

Quick and easy mortises. This jig makes it simple to set up and rout mortises in straight or angled stock, on the end or edge of a workpiece.

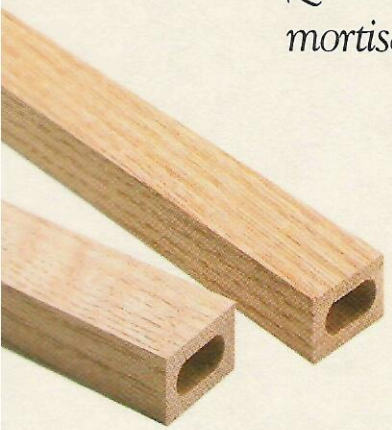

▲ *What makes this jig stand out is that it makes routing mortises in the end of straight or mitered workpieces easy.*

When it comes to cutting mortises, I usually drill overlapping holes and clean up the sides with a chisel. But while drilling the mortises for the plant stand (page 24), I started thinking about ideas for a mortising jig to use with a router. What's great about this jig is that it can easily handle mortises on the ends of straight or mitered workpieces for loose tenons.

The jig is pretty easy to set up. There are four adjustable stop blocks on top that control the width and length of the mortise. And a couple of interchangeable fences on the front of the jig let you easily secure both vertical and horizontal workpieces.

TOP. I began by building the top. The *top* (*A*) is just a piece of ¾" plywood with an opening in the center for the router bit. There are two sets of intersecting grooves cut in the top that guide adjustable side and end stop blocks.

There's nothing complicated about making the top. After cutting the plywood to size and rounding the corners, I made the opening by drilling four starter holes and cutting out the waste with a jig saw, as in Fig. 2. The opening

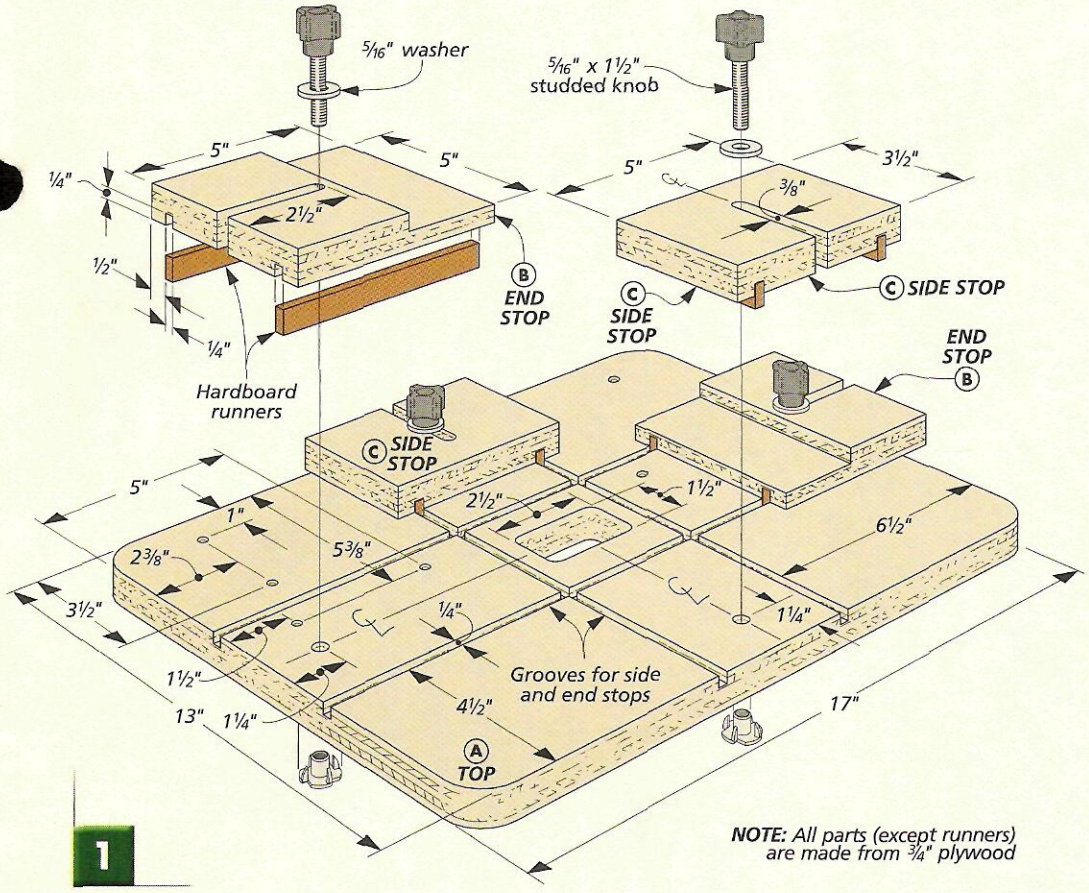

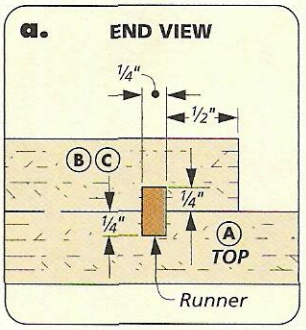

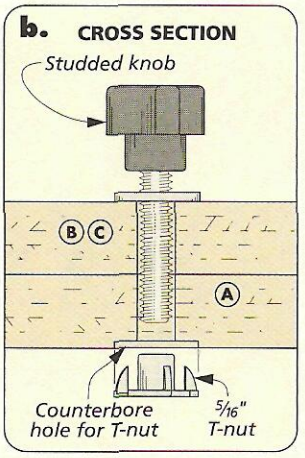

is large enough to allow you to see the mortise for set up and routing.

The next thing to do is drill counterbored holes for studded knobs and T-nuts that will secure the stop blocks, as you can see in Fig. 1b. I also drilled some countersunk shank holes for screws that will be used later to attach the top to the base of the jig. (Fig. 1)

Two sets of grooves are then cut in the top to guide the stop blocks that are built next. The grooves are sized to fit 1/4" hardboard that will be used as runners on the stop blocks.

STOP BLOCKS. With the top complete, all that's left is to make the *end stops (B)* and *side stops (C)*. They're cut to size from 3/4" plywood. Then an adjustment slot is cut in each one for a studded knob. To do this, drill a hole at the end of the slot and cut out the waste with a jig saw.

Next, a pair of grooves are cut in the bottom of each block to match the grooves in the top. Then I ripped 1/4" hardboard runners to fit in the grooves, as in Fig. 1a.

Finally, the two end stops have a wide rabbet cut on the opposite side of the grooves (Figs. 3 and 3a). This provides clearance for your hands.

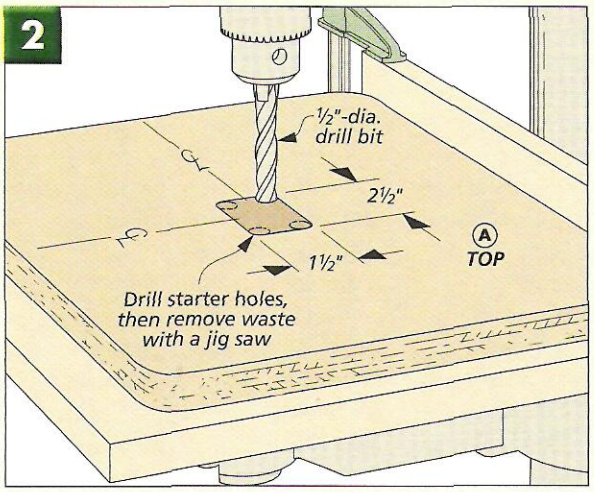

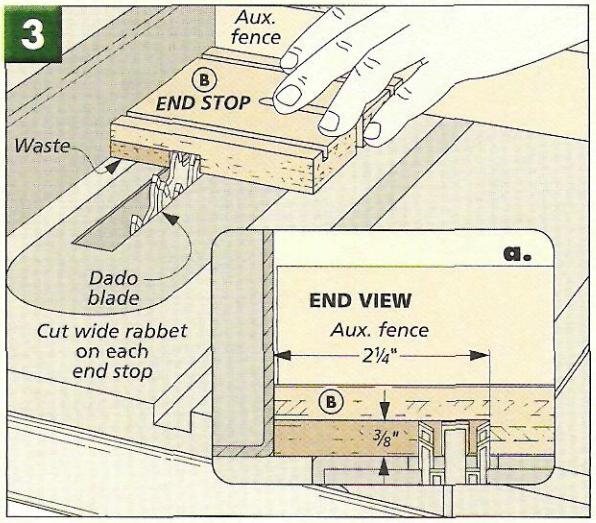

MATERIALS

A	Top (1)	3/4 ply. - 13 x 17
B	End Stops (2)	3/4 ply. - 5 x 5
C	Side Stops (2)	3/4 ply. - 5 x 3 1/2
D	Front (1)	3/4 ply. - 8 x 16
E	Sides (2)	3/4 ply. - 4 7/8 x 8
F	Back (1)	3/4 ply. - 8 x 11 1/2
G	Feet (2)	1 1/2 ply. - 1 1/2 x 4 7/8
H	Fence (1)	3/4 ply. - 1 1/2 x 7 1/4

ALSO NEEDED: *1/4" hardboard for runners.*

SUPPLIES

- (4) 5/16" x 1 1/2" Studded Knobs
- (6) 5/16" Washers
- (4) 5/16" T-nuts
- (23) #8 x 1 1/2" Fh Woodscrews
- (2) 5/16" x 1 3/4" Flange Bolts
- (2) 5/16" Through Knobs
- (1) 36" T-track (3/8" x 3/4")
- (10) #6 x 1/2" Fh Woodscrews
- (1) 1/4" Clear Plexiglas - 6" x 7"

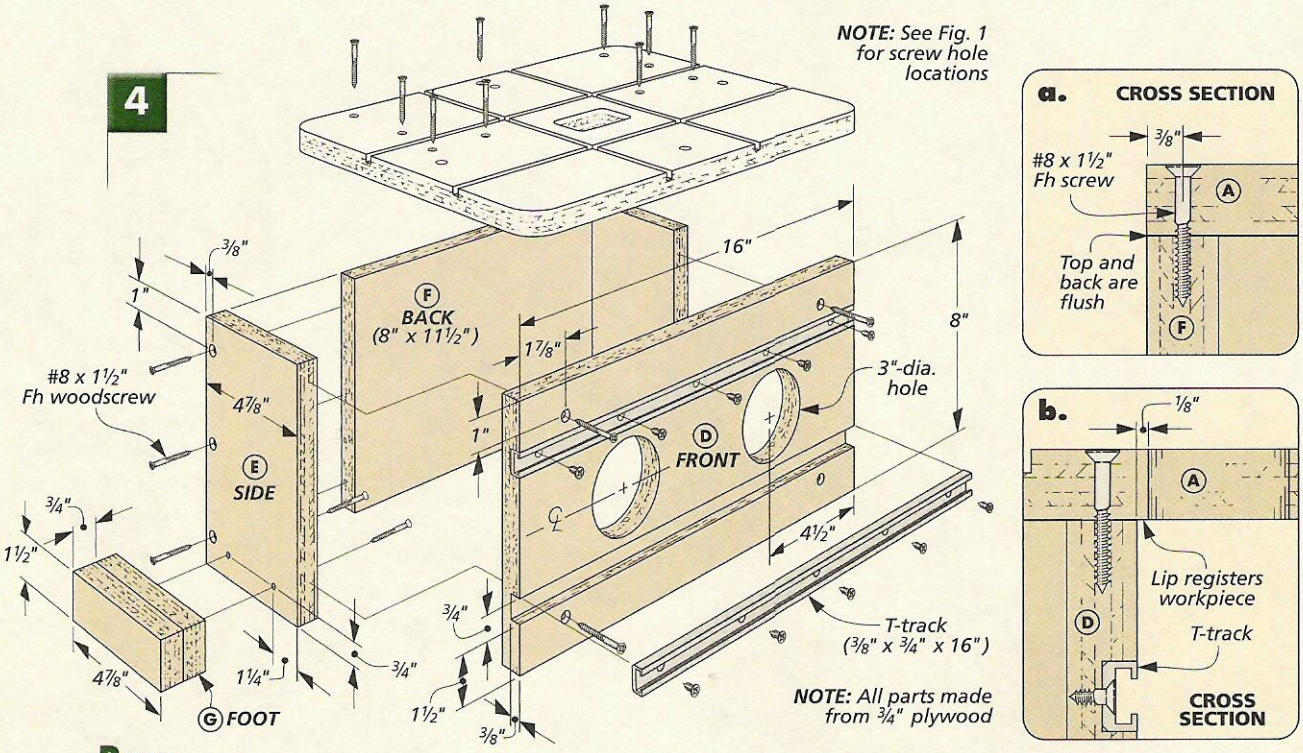

Base

With the top of the jig completed, I began working on the base. As you can see in Fig. 4, the base of the jig is just a plywood box with a wide front face where the workpiece is attached. Two T-tracks mounted on the front of the base let you attach one of two fences for supporting a workpiece horizontally or vertically. A couple of feet attached to the sides of the base let you quickly and securely clamp the jig to your workbench.

FRONT. To make the base, I began by cutting the *front (D)* to size from ¾" plywood. Two large holes are then cut in the face. These holes allow you to clamp the workpiece to the jig while it's being routed. After drilling a starter hole, I cut out the waste with a jig saw and sanded the edges smooth, as shown in Fig. 5.

The next step is to cut two horizontal grooves in the front, one above and the other below the clamping holes. There's nothing difficult here. The grooves are sized to fit the T-track. I cut them on the table saw with a dado blade, as in Figs. 6 and 6a. Once the grooves are complete, you can cut some T-track to length and screw it in the grooves and then file the ends flush.

At this point, the remaining parts of the base can be made. The *sides (E)* and *back (F)* are cut to size from ¾" plywood. Assemble the base by screwing the back between the sides and then screwing the front to the sides. Next, I cut two *feet (G)* to size from two layers of plywood and screwed them to the sides of the box just behind the front.

ASSEMBLY. With the base complete, you can attach the top. The important thing to remember here is to make sure the top is square to the front of the base. The reason for this is so that the mortise will be cut parallel to the sides of the workpiece. The easiest way to do that is to make sure the back edge of the top is flush with the base, as in Fig. 4a.

If you reach through the opening in the top with your finger, you'll notice that there's a small (⅛") lip between the front of the base and the router bit opening, as in Fig. 4b. You can use this lip to register the end of a workpiece so that the mortise will be square to the face.

Now the jig is nearly finished. All that's left is to make a pair of fences and an auxiliary router baseplate.

Woodsmith GO ON-LINE EXTRAS

Learn more about how to set up and use this router mortising jig:

Woodsmith.com

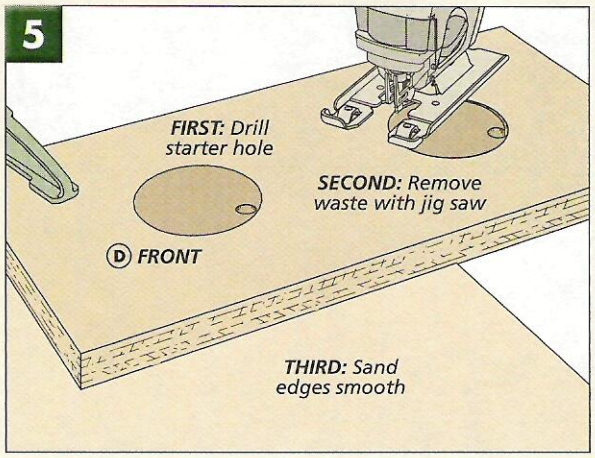

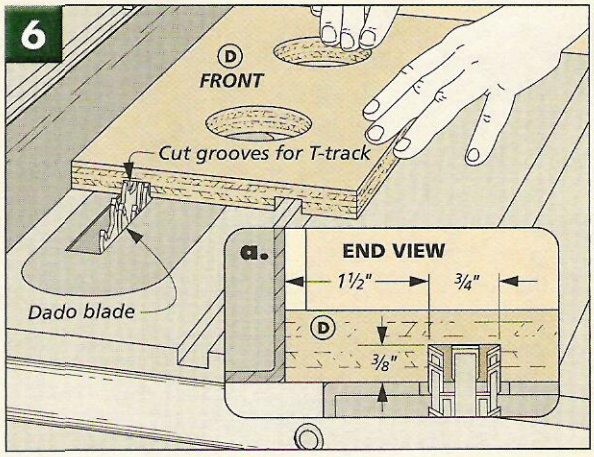

Fence and Baseplate

To support a workpiece while it's being mortised, I built a pair of fences. For mortising the end of a workpiece, I made a simple vertical fence that's attached to the T-track on the front of the jig. (To build an optional horizontal fence, see the box below).

VERTICAL FENCE. To make the *vertical fence (H)*, simply cut a piece of plywood to size, as shown in Figs. 7 and 7a. Next, a mounting hole is drilled to secure the fence to the lower T-track. The top of the fence is slotted so that the fence can be pivoted to support the workpiece at an angle. This slot is made by drilling a series of overlapping holes and cleaning up the sides with a file.

ROUTER BASE. The last part of the jig to make is a replacement baseplate for the router. The flat-sided baseplate is used to tilt the router into the jig to cut the mortise. And to make it easier to line up the router bit with the mortise on the workpiece, it's made from clear *Plexiglas*.

I also found that the standard baseplate on my router isn't centered. The problem is that if the router pivots in use, it would result in an off-center mortise. This would throw the joint out of alignment.

The baseplate is sized to be just a little wider than the base of the router (about 6"). It's about 1½" longer to give your hands more room when tipping it into the jig, as shown in Fig. 8. After drilling a ⅞" clearance hole for the bit, I drilled and countersunk the screw holes needed to attach the baseplate to the router, as illustrated in Fig. 8a.

The jig is pretty straightforward to use. But to get the best results, turn to the article on page 22.

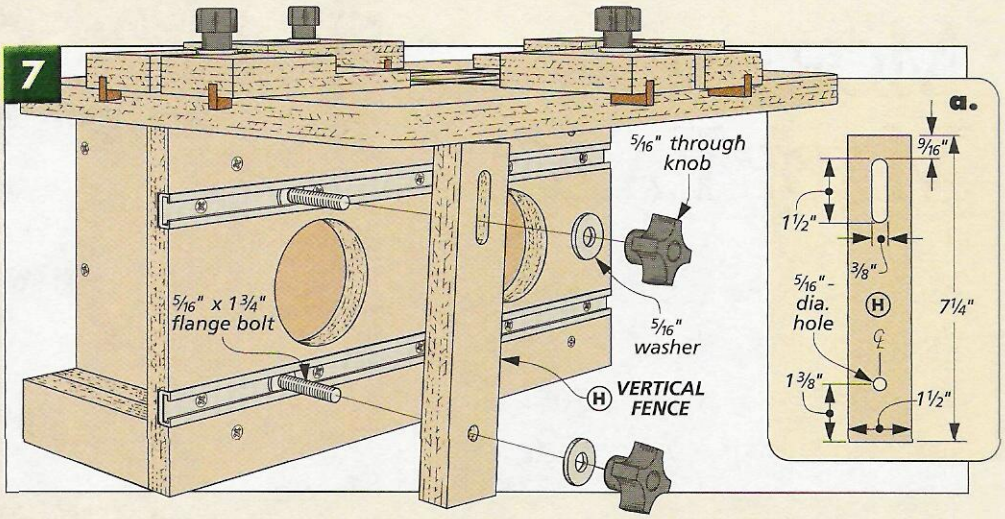

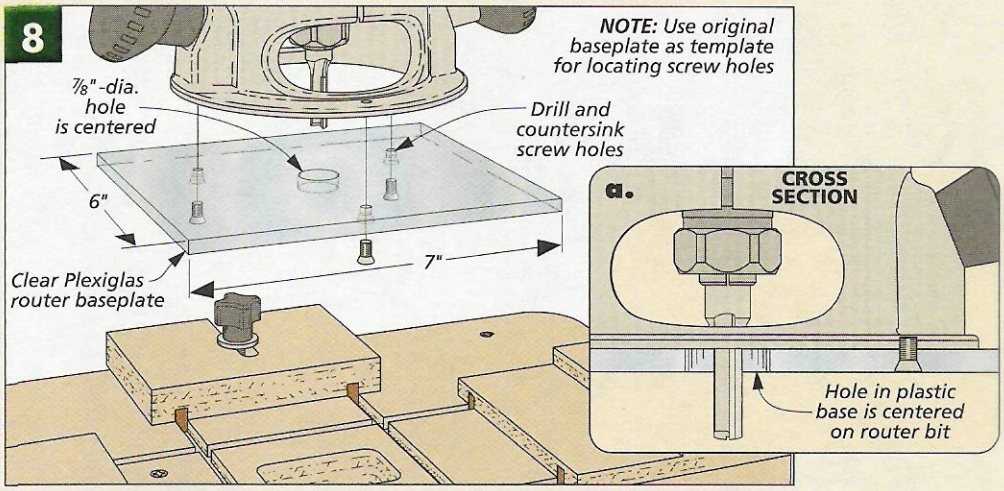

Optional Horizontal Fence

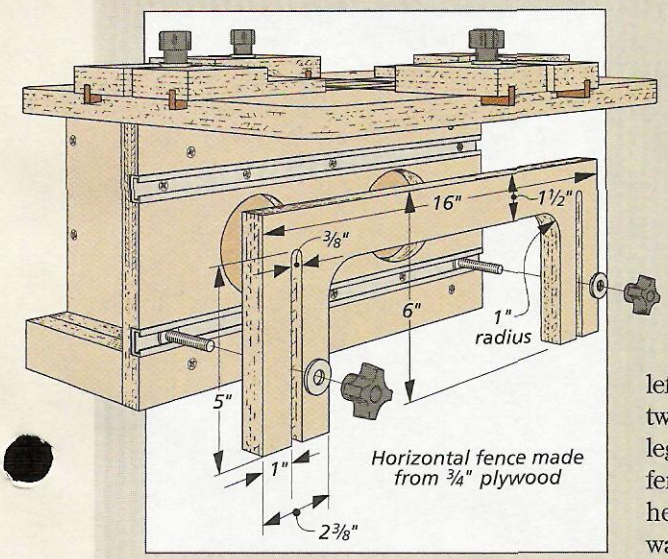

If you plan on using the jig for mortising long parts, like the legs of the plant stand or hall table, you'll want to make a horizontal fence, as shown in the photo at right.

The fence is nothing more than a U-shaped piece of plywood, as you can see in the drawing at left. After cutting it to shape, two slots are then cut in each leg. And just like the vertical fence, the horizontal fence is held in place by knobs, washers, and flange bolts.

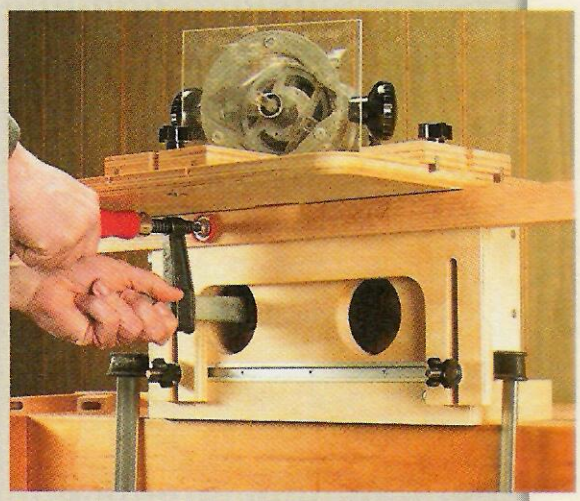

▲ *The horizontal fence supports a long workpiece when cutting mortises along the edge.*

Mortising Made Easy

Put away your chisels. We'll show you how this jig and an ordinary fixed-base router can give you mortises in minutes.

▲ *Clamp the workpiece to the jig, then position the stops. That's all it takes to set up this jig for routing mortises in just about any workpiece.*

Routing mortises with this jig couldn't be simpler. It's just a matter of clamping the workpiece in the jig and setting the stops. But to get the best results, it's a good idea to have a few test pieces on hand. This way you can get the jig set up to rout perfect mortises without ruining one of your parts.

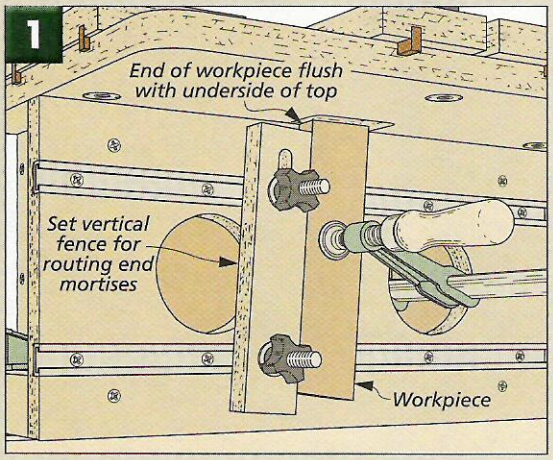

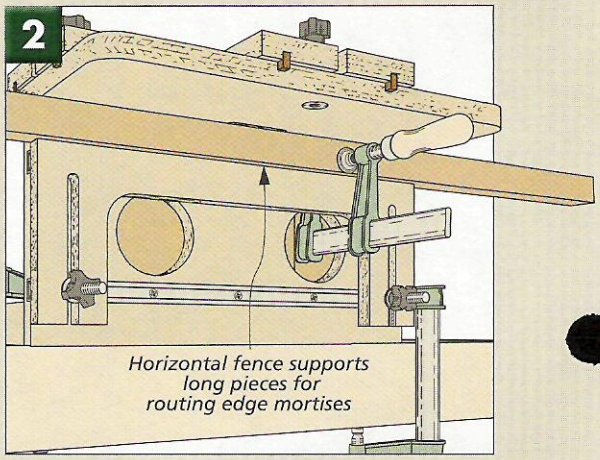

SETUP. The first step is to lay out the mortise. Here you'll want to take time to make sure that the mortise is centered on the thickness of the workpiece.

The workpiece can be clamped to the front of the jig whether horizontally or vertically, as in Figs. 1 and 2.

For mortising the end of a workpiece, slide the vertical fence against the workpiece and tighten it in place. Then clamp the workpiece to the jig, as shown in Fig. 1.

For making mortises along the edge of a workpiece, use the U-shaped fence to sandwich the workpiece against the top of the jig (Fig. 2).

At this point you're ready to position the stops. Start by setting the router (with baseplate) on the jig. If you look down through the baseplate and table, you can see the outline of the mortise. Now position the side stops so the bit is centered over the mortise. Finally, you can set the end stops for the beginning and end of the mortise, as shown in Figs. 3 and 3a.

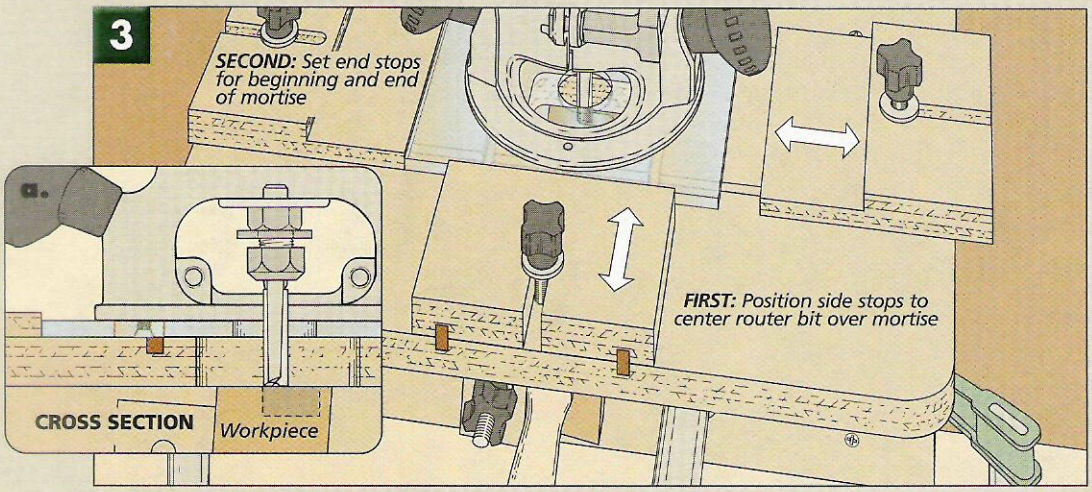

ROUTING. To cut a mortise, just set the bit depth and place one edge of the baseplate against an end stop. I turned the router on and then slowly lowered the router into the workpiece, just like closing a lid, as you can see in the photo above.

Slide the router to the other end stop and back again and then shut the router off. Once the bit stops spinning, you can lift off the router and compare the mortise with the layout. W

SHOP NOTES

Laying Out Evenly Spaced Holes

I had two small challenges when drilling the holes for the dowels in the plant stand rails. First I wanted the dowels to be straight up and down and parallel to each other. But the fact that the top and the bottom rails are different lengths makes this a little more difficult. Plus they also needed to be centered across the width of the rails. Well it turned out both parts of this puzzle have an easy solution.

LAYOUT. Half the battle to drilling the holes accurately is the layout. I started on this by a making a centerline along the width of the rail and then finding the center along the length of each piece. This is the position of the middle hole (Fig. 1).

Now to be sure that the spacing of the other holes was equal, I turned to a compass. Fig. 1 shows how this works. First carefully set the compass to draw a 2"-dia. circle. And then using the centerpoint on the rails, draw an arc in each direction. I marked all the pieces (8 rails) using this same setting. Next reset the compass to a 4"-dia. circle and repeat the process.

CENTERING. Once the holes are laid out, the next trick is to drill them so they're centered across the width of the rails. Figs. 2 and 2a explain the centering process pretty well.

First, I put a fence on the drill press to keep the holes in line. Next, you can adjust the fence until the point of the drill bit falls in the same hole after you flip the rail end for end. Once you've found the centerpoint, you can drill the holes.

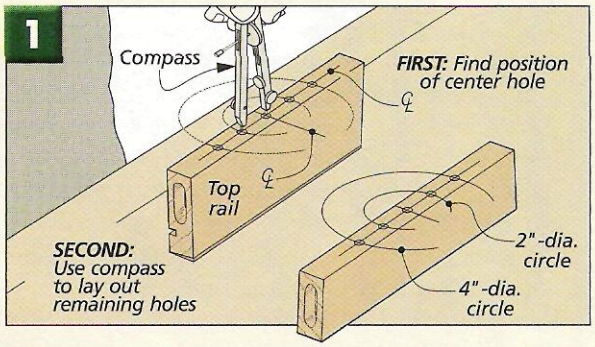

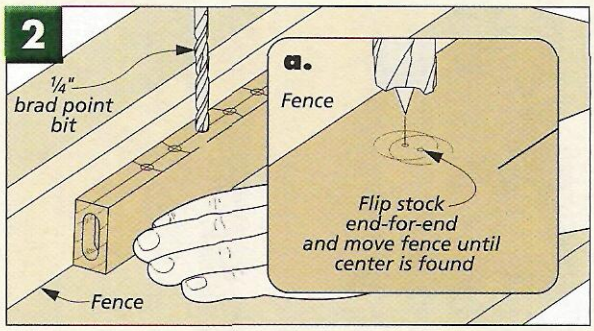

Working With Small Cove Pieces

The problem with making small moldings on the router table is that the pieces can be too hard to handle. The cove needed for the hall table is only 5/16" x 3/8". Trying to run a piece this size across the router table would be asking for trouble.

As you can see in the photo at right, the simple solution is to make multiple pieces from one large blank. It's quicker and easier.

ROUT. I started by cutting a 1 1/4"-wide blank from 1"-thick stock. With this size blank, routing a 1/8" cove on all four corners, as shown in Fig. 1, is a safe and simple job.

TABLE SAW. After the coves are routed, you're now ready to make four pieces of cove out of the single oversized blank. Figs. 2 and 2a show how to get started. First I made a "tall" cut — ripping two 5/16"-thick pieces from the blank, as shown in Fig. 2a. You only want to expose as much saw blade as necessary. And using a notched push block will make the end of the cut safer.

Now completing the molding is just a matter of turning the two pieces into four. Take a look at Fig. 3 for help here. I just lowered the blade, reset the fence and carefully ripped the molding to final size.

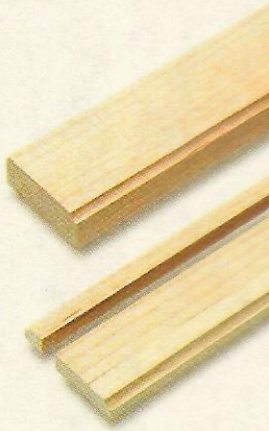

▲ *One oversized blank will safely give you four cove trim pieces.*

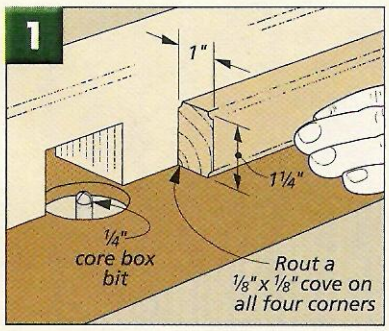

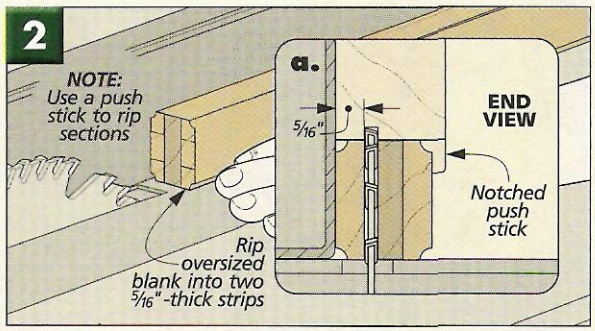

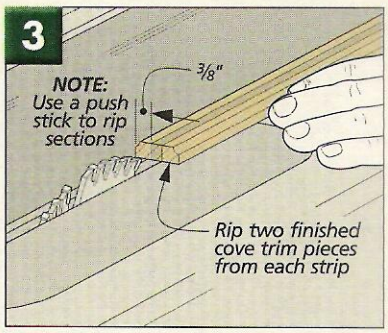

WEEKEND PROJECT

CLASSIC OAK PLANT STAND

With its classic looks, this plant stand is rock-solid, uses a simple joinery technique, and is easy to build in a weekend.

When you think about it, splayed legs make sense for a tall, narrow project like this plant stand. Because it's wider at the base, it'll be less likely to tip over with a heavy, potted plant on top. But for a woodworker, any time you start adding angles, it means the joinery can get pretty complicated. However you won't find any tricky joinery here.

Ordinarily, a piece like this would have traditional mortise and tenon joinery. But I wanted this to be a simple and straightforward project, so I tried something a little different. The legs and rails are joined with "loose tenons." Think of them as short splines. All I had to do was cut matching mortises in both the legs *and* rails. And all it takes to make the joints are a drill press, hand drill and doweling jig. Or you could rout the mortises using a mortising jig, see photo on opposite page.

If you're like me, building just one of these plant stands isn't going to be enough. As an option, you can build the shorter version shown on page 27.

LEGS. The first thing to do is size the 1¼"-square *legs (A)* and cut them to rough length (42" long). Next, mark one edge of the leg "UP" to help keep the angled cuts on each end oriented. Then attach a long, auxiliary fence to the miter gauge to support the long workpieces. Now tilt the saw blade

MATERIALS & SUPPLIES

A	Legs (4)	1¼ x 1¼ - 39 7/16
B	Bottom Rails (4)	¾ x 1¼ - 11¼
C	Middle Rails (4)	¾ x 1¼ - 8⅛
D	Upper Rails (4)	¾ x 1¾ - 7¼
E	Spindles (20)	¼-dia. x 6¼
F	Tenons (24)	⅜ x ⅞ - ⅞
G	Frame (4)	¾ x 2¼ - 12½
H	Panel (1)	½ ply. - 10 x 10

- (8) ½" x ½" Steel Tabletop Fasteners
- (8) #8 x ½" Rh Woodscrews
- (1) 8" x 8" Ceramic Tile

and angle the miter gauge 4°, as you can see in Figs. 2, 2a, and 2b.

With one end cut, the next thing to do is cut all four legs to final length. To do this, simply move the miter gauge to the other side of the blade and slide the auxiliary fence over (Fig. 3a). Then clamp a stop block to the fence and cut all the legs to the same length, as in Fig. 3.

MORTISES. Once the legs are cut to final size, you need to cut three sets of mortises on their inside edges for the rails. There's nothing unusual here, just take your time laying out the mortises so they line up with each other, as in Figs. 1a and 1b. Then the mortises are drilled out with a series of overlapping holes using a 3/8"-dia. Forstner bit on the drill press. Finally, I cleaned up the sides of the mortises with a chisel. Note: Since the loose tenons you'll be making later have rounded edges, you don't need to square up the ends of the mortise (Fig. 1a).

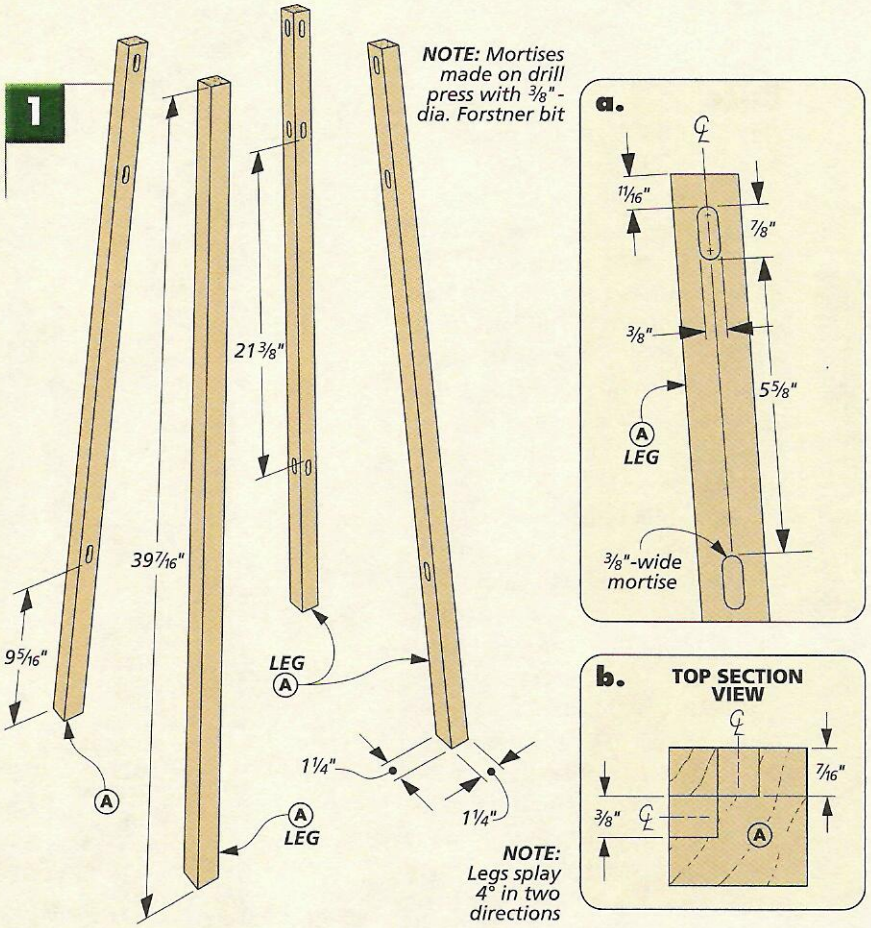

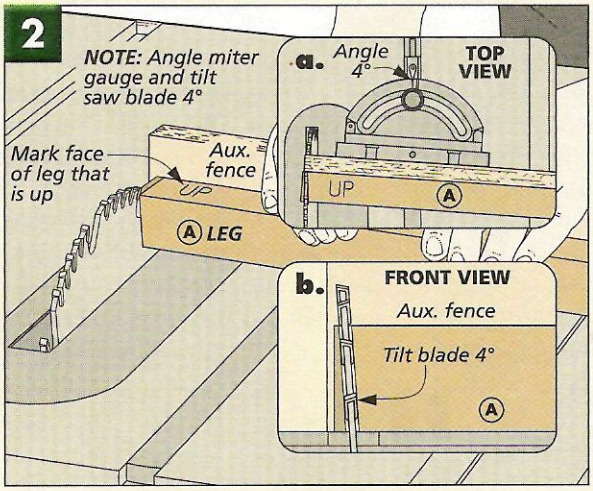

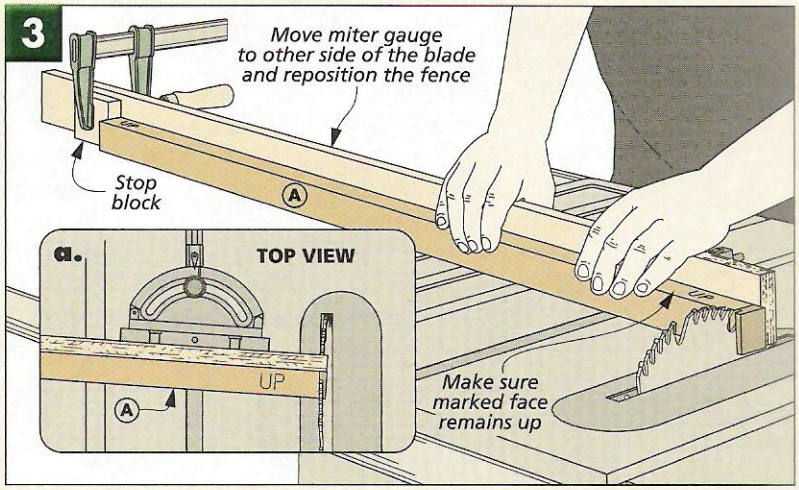

CUTTING DIAGRAM

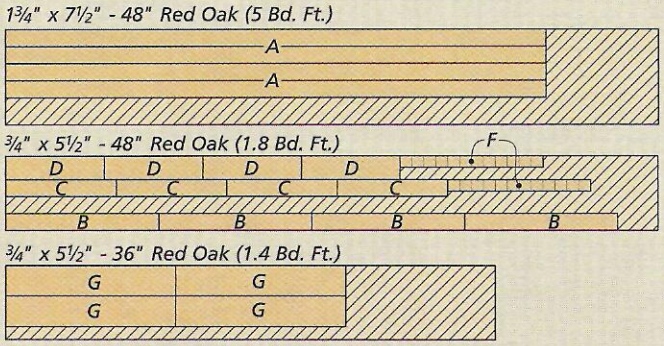

ALSO NEEDED:
One 12" x 12" piece of 1/2" plywood for the panel; four 1/4"-dia. x 36" dowels

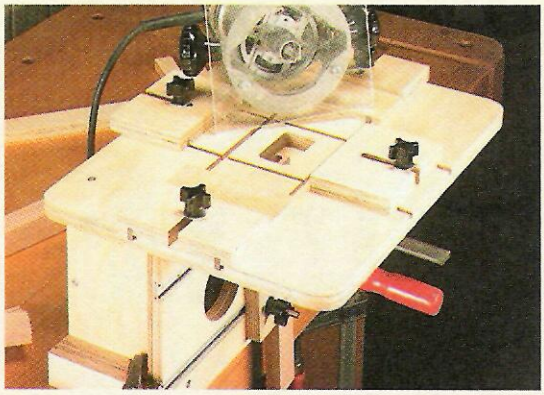

▲ *This simple mortising jig makes it easy to rout mortises on the end of a workpiece or on its edge. To build one, turn to page 18.*

Base

Now that the legs are complete, I turned my attention to the parts that connect them — the rails.

RAILS. There are three sets of rails needed for the plant stand. The middle and upper rails are connected by dowels. The lower rails add strength to the base of the stand. I began by ripping the *bottom (B)*, *middle (C)*, and *upper rails (D)* to width. Note: The upper rails are ripped extra wide (2").

Next I mitered the ends of the rails. This time there's just one angle to cut, so I set the miter gauge to a 4° angle. Then, I cut the rails to length using the same stop block and auxiliary fence set up as before.

SPINDLES. With the middle and upper rails cut to length, they can be drilled for the spindles that connect them. The key thing here is that the holes are centered on the thickness and evenly spaced along the length of the rails. For an easy way to do this, turn to page 23. Once the holes are drilled, cut the *spindles (E)* to fit from 1/4"-dia. dowels.

▲ *For a simple and accurate way to lay out evenly spaced holes, turn to page 23.*

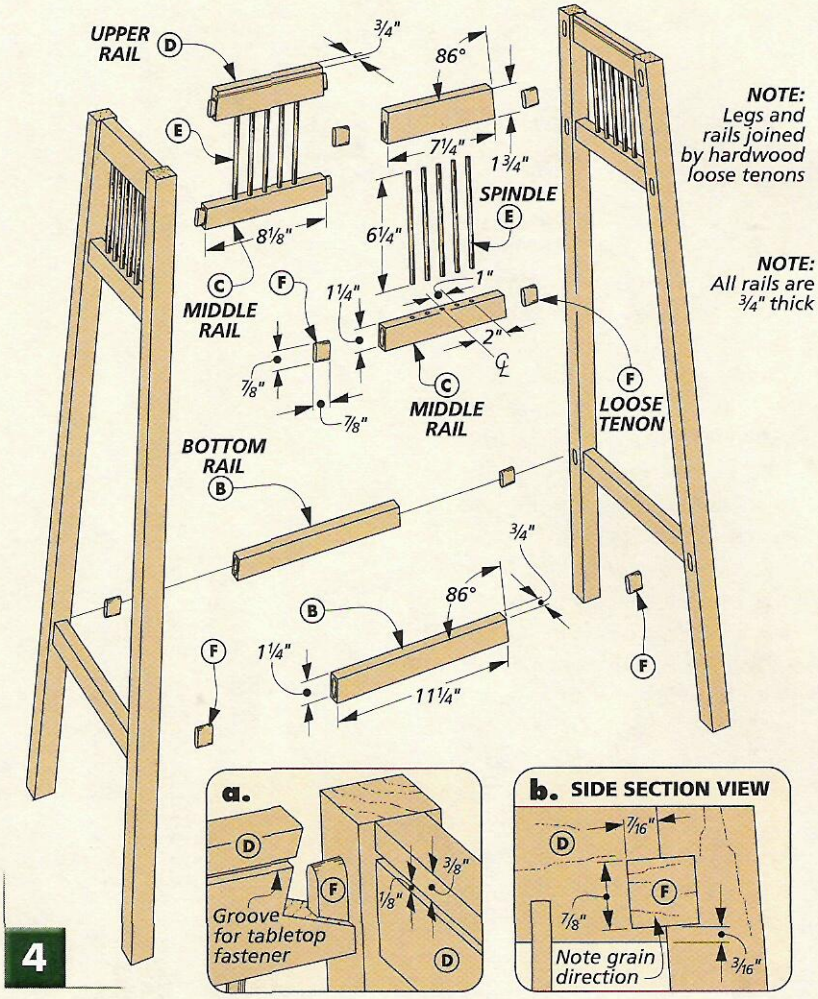

4

At this point, the ends of each rail can be mortised. The problem is, it would be difficult to do this on the drill press. To solve this problem, I used a self-centering doweling jig, as you can see in Fig. 5. The jig is secured over the end of the rail, which gets clamped in a bench vise. Then with a 3/8"-dia. bit, I drilled a series of overlapping holes, adjusting the jig as I went. Again, clean up the mortise sides with a chisel.

There are still a few things left to do on the upper rails. First, the top edge needs to be beveled to final width, as you can see in Fig. 6. Finally I cut a groove for the tabletop fasteners on the inside face of the rails (Fig. 7). I put the flat side of the rail against the fence so that the beveled edge wouldn't sneak under the rip fence, as shown in Fig. 7a.

TENONS. The base is almost ready to be assembled. All that's left is to make the loose *tenons (F)* that join the rails and legs. I began by planing a pair of extra-long blanks to

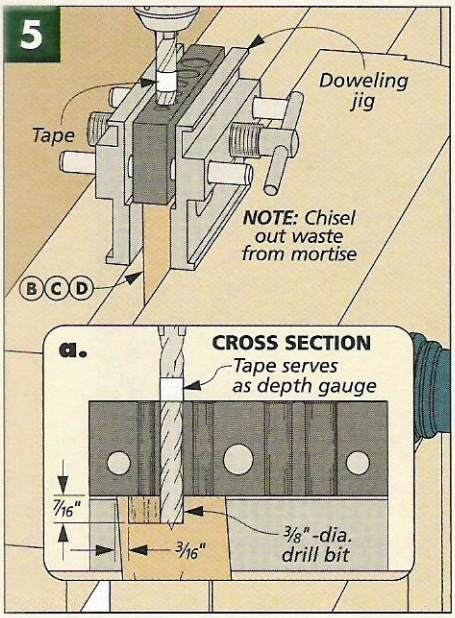

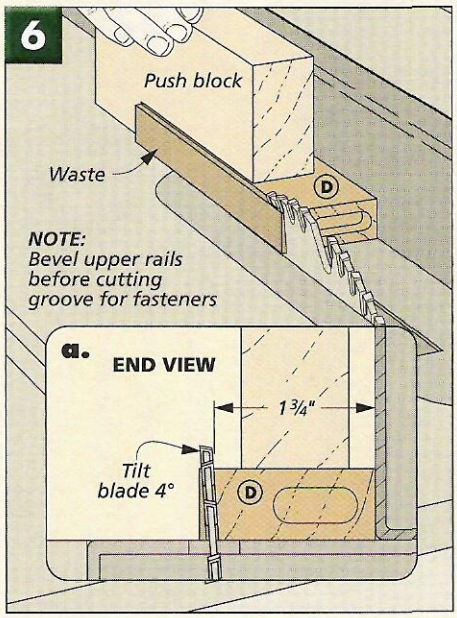

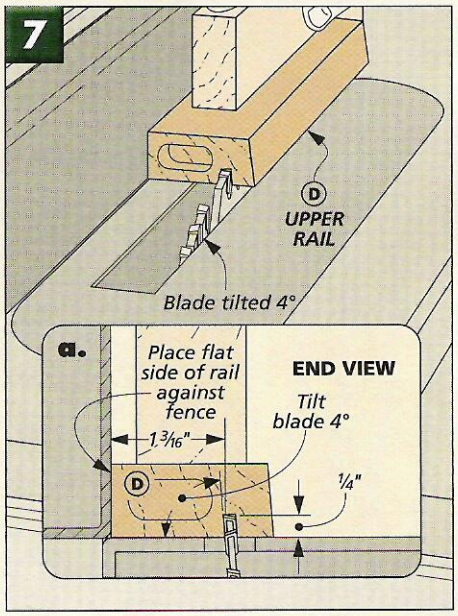

3/8" thick. After rounding over all four edges, the tenons can be cut to length, as shown in Fig. 4.

The base is now ready to be assembled. I found it easier to make two side assemblies, then join them together, as in Fig. 4.

FRAME AND PANEL TOP

The top of the stand is nothing more than a hardwood frame wrapped around a plywood panel, as in Fig 8. Then an 8"-square ceramic tile is set in the center. Not all 8" tiles are exactly the same thickness or size, so it's a good idea to have the tile on hand before building the top. This way you can fit the frame parts to the tile.

To build the top, the first thing to do is make the frame. As you can see, this small frame has a rabbet cut along the inside bottom edge and a bevel on the outside edge. However, the pieces of the frame are pretty small. To make things easier and a lot safer, it makes sense to do a few things a little differently.

FRAME. For example, the *frame (G)* pieces start out as an oversize blank. This way, you can cut a wide groove in the *middle* of the blank, as in Fig. 9. If you tried to cut a rabbet this wide on the edge of the narrow workpiece, there's a chance the piece would tip into the blade as it's being cut. Doing it this way eliminates that problem.

You'll want to size the depth of the groove so that the remaining "tongue" is equal to the thickness of the ceramic tile. When the groove is cut, flip the blank on its back and rip it to final width (2 1/4").

At this point, a *panel (H)* is cut from 1/2" plywood to fit inside the rabbet on the frame (10"). Then the frame pieces can be mitered to fit and the edges softened.

Next, the underside of the frame is beveled (Fig. 10a). I waited to bevel the edge because it's safer cutting a larger piece and I can be sure the bevels will line up at the corners. I attached a tall auxiliary fence to the rip fence to keep the frame from tipping, as in Fig. 10. Finally the top is screwed to the base and the tile is set in place.

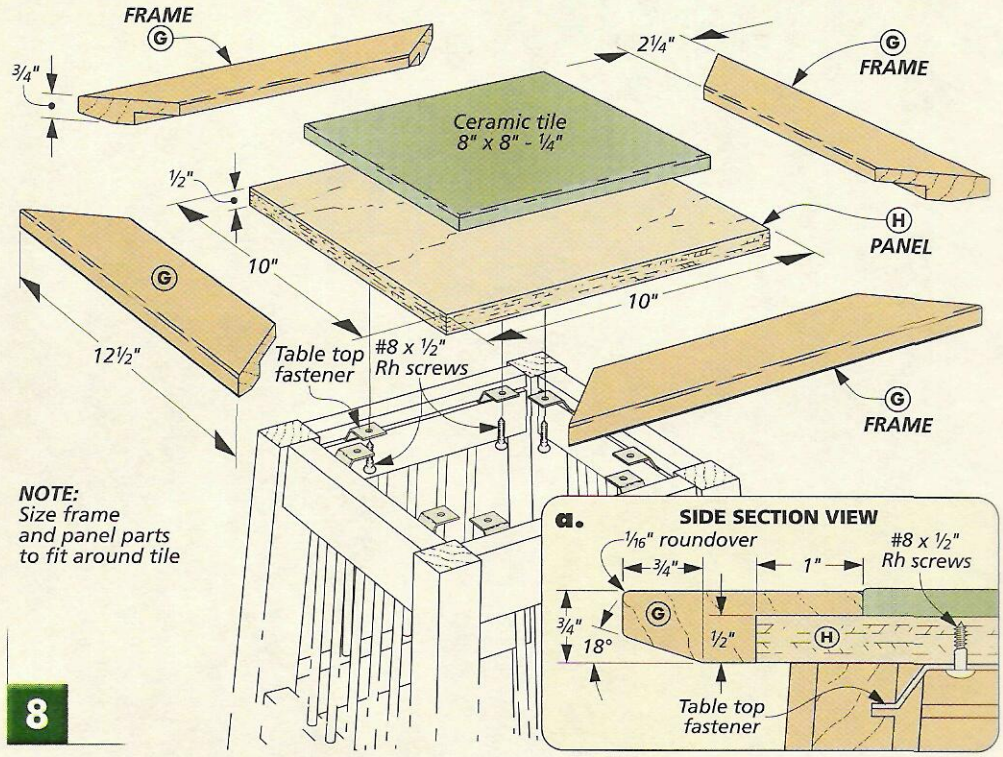

8

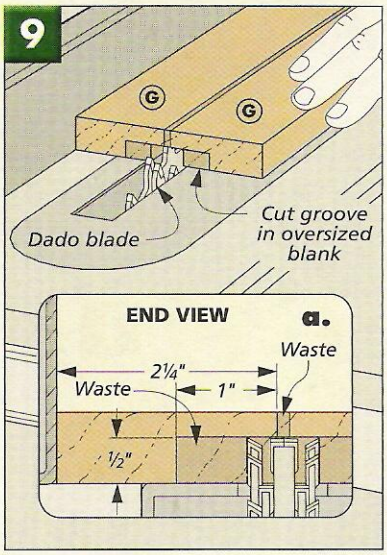

9

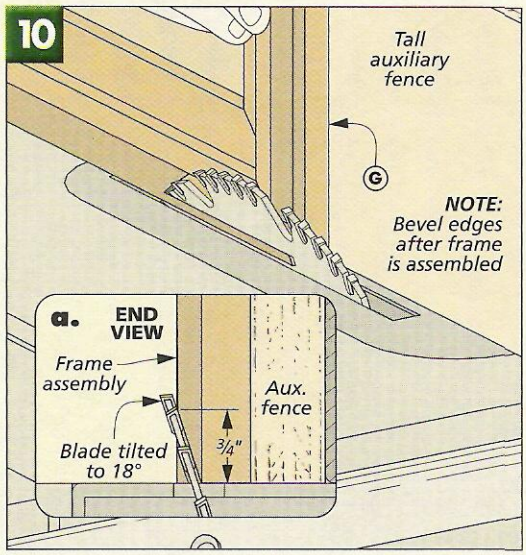

10

SHORT PLANT STAND

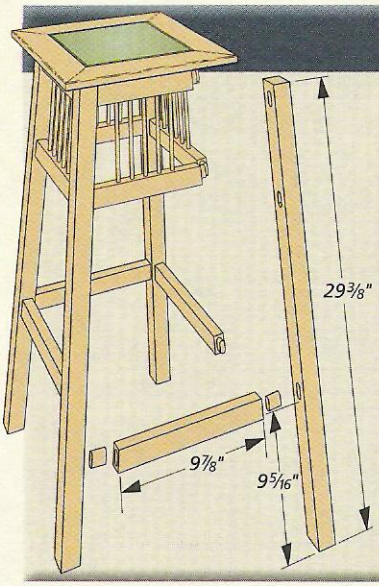

After building the first plant stand, I realized that one size doesn't fit all. So I made a smaller version, as shown in the photo at right. The best part about it is that there's not a whole lot that needs to be changed on it.

To keep things simple, the frame top, middle, and upper rails remain the same size. But since the legs are shorter, the lower rails have to "slide" up, shortening them as well, as illustrated in the drawing at left.

SHOOTING BOARD

With a sharp plane and this simple jig, you'll be on your way to perfect-fitting miters.

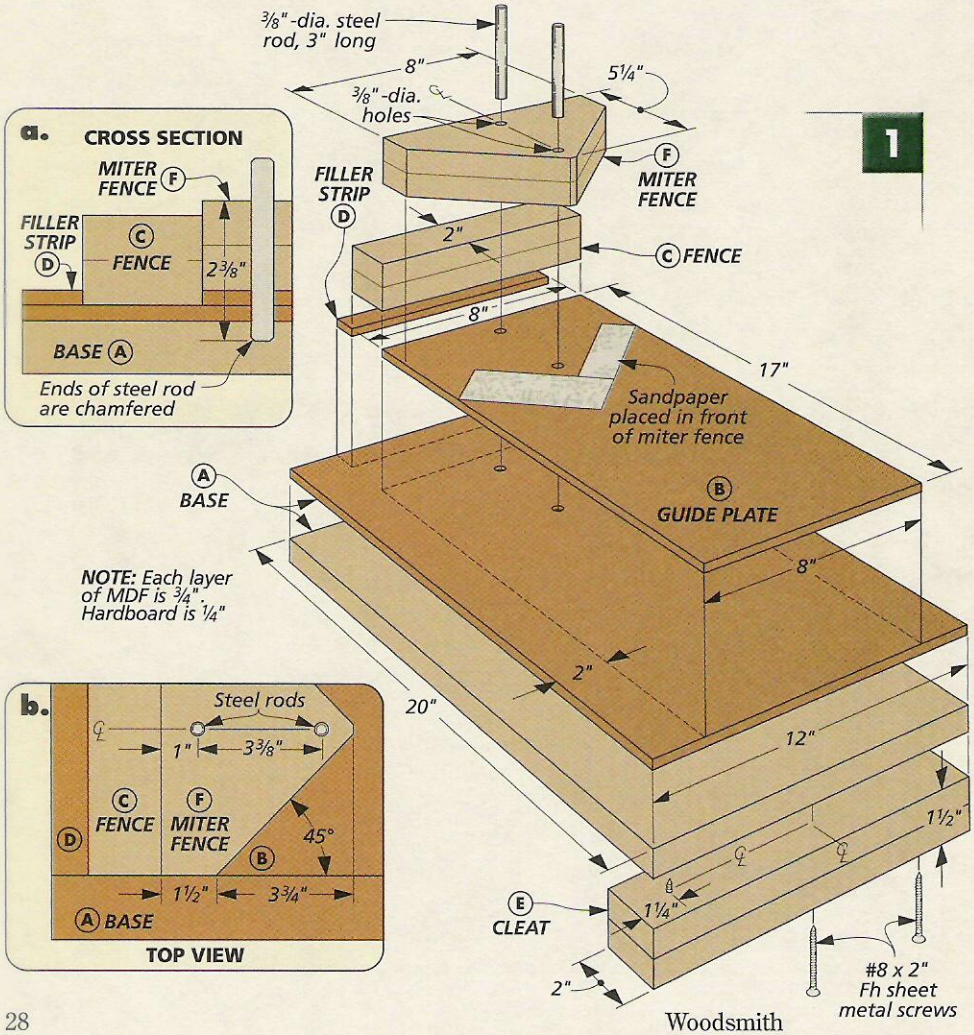

Perfect miters. They seem simple enough. Just make a 45° cut on two pieces and you're done. But if you've ever tried fitting a picture frame together, you know it's not that easy. No matter how carefully you set up your saw, there's always some "tweaking" that needs to be done. That's where this shooting board comes in.

When used with a hand plane, the shooting board allows you to take paper-thin shavings off the end of a mitered workpiece. So you end up with a perfect-fitting joint.

The great thing about this shooting board is that it doesn't require much in the way of time or materials to build. In fact, I built mine from some scrap MDF and hardboard I had laying around the shop. It's just a small platform that hooks over the edge of a workbench. A couple of fences support and back up the workpiece — one for straight joints and the other for mitered joints.

TABLE. To build the shooting board, I began by cutting the *base (A)* from

3/4" MDF. It's then covered with a piece of 1/4" hardboard (Fig. 1). In the center of the base, I glued a narrow hardboard *guide plate (B)* to create a two-sided straightedge for the plane to ride against.

Next the *fence (C)* is cut from two layers of 3/4" MDF and attached behind the guide plate. Then a *filler strip (D)* can be glued on as well (Fig. 1a.). An MDF *cleat (E)* keeps the jig in place on the workbench.

MITER FENCE. The last part of the shooting board to make is the *miter fence (F)*. Here again it's nothing more than two layers of 3/4" MDF with two angled sides that are cut at 45° to form a triangle.

To hold the miter fence in place, I drilled a pair of holes through the fence and into the table. A pair of steel rods are then cut to length (Fig. 1b). Finally I stuck a couple strips of self-adhesive sandpaper to the guide plate to keep the workpiece from shifting, as in Fig. 2.

SETUP. That's really all there is to building the shooting board. But there are a few things to do before you start "shooting" miters. First, choose a plane. I like to use a No. 5 (or jack) plane because its large size will help it cut through end grain (Fig. 3). You'll also want to make sure the sole is square to the sides, as in the upper right photo.

With the plane set to take a thin shaving, there's one thing left to do. Take a pass (without a workpiece) to create clearance for the blade.

Now you can set the workpiece on the jig. It should barely overhang the end of the fence. Hold it tight against the fence and take a cut.

To prevent tearout, it helps to dampen the end grain, as shown in the lower photo at right. Check the fit of the joint after each pass. You may need to take several strokes before the joint fits tight.

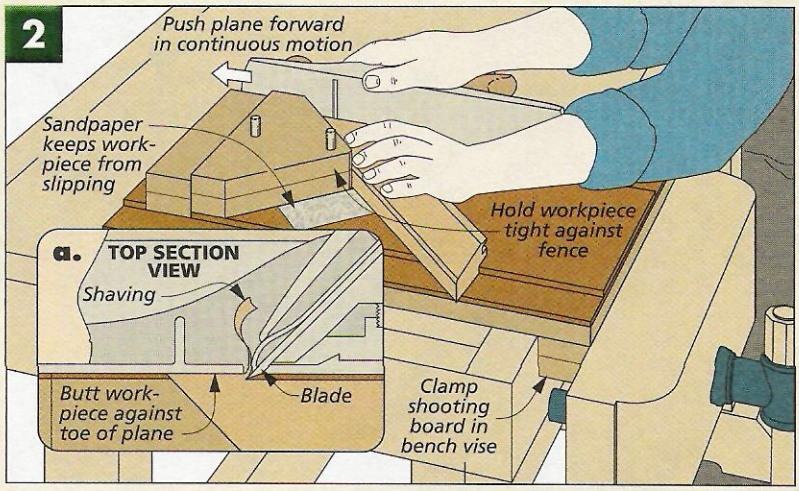

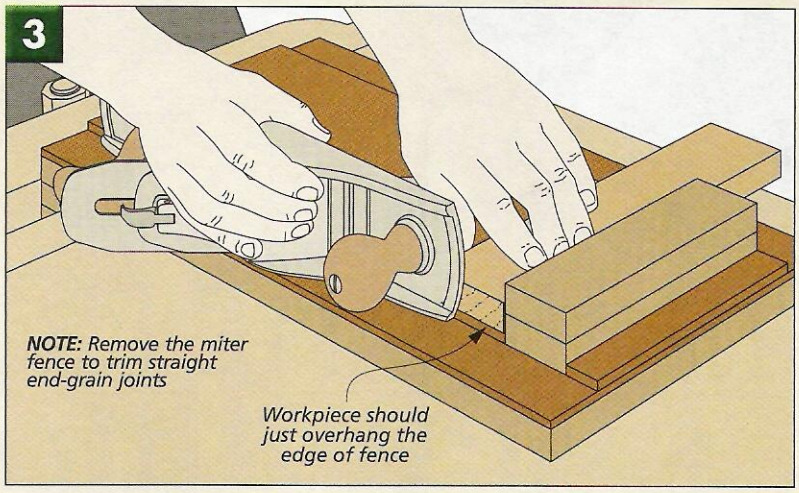

▲ *For best results, the sides of the plane should be square to the sole.*

▲ *Dampen the end grain with a wet cloth to help prevent tearout.*

CLASSIC HAND TOOLS: MITER PLANES

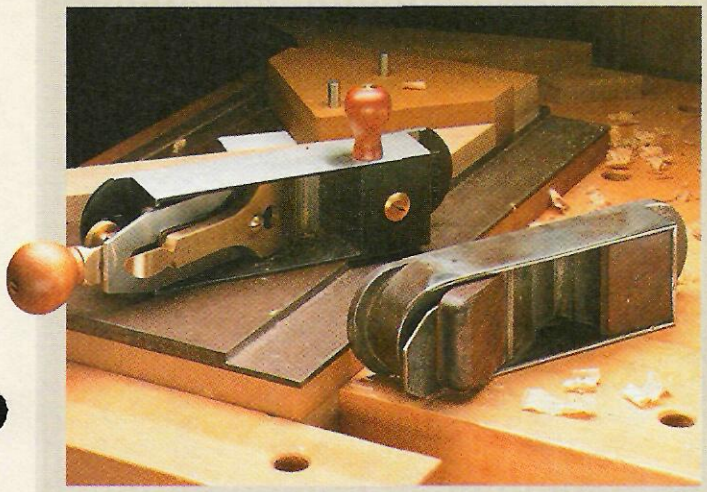

Although any plane can be used on the shooting board, miter planes (like the ones shown at left) are designed to be used on their sides. The wide, flat sides make them very stable during a cut. They're heavier than standard bench planes to help plow through end grain.

The miter plane on the right is more than 100 years old. The body is made of cast iron and is "filled" with rosewood and mahogany. Its thick, tapered blade is held in place by a wood wedge.

The plane on the left is made by Lie-Nielsen. It features a screw-type adjuster and a front knob that mounts on either the left or right side. For sources, see page 35.

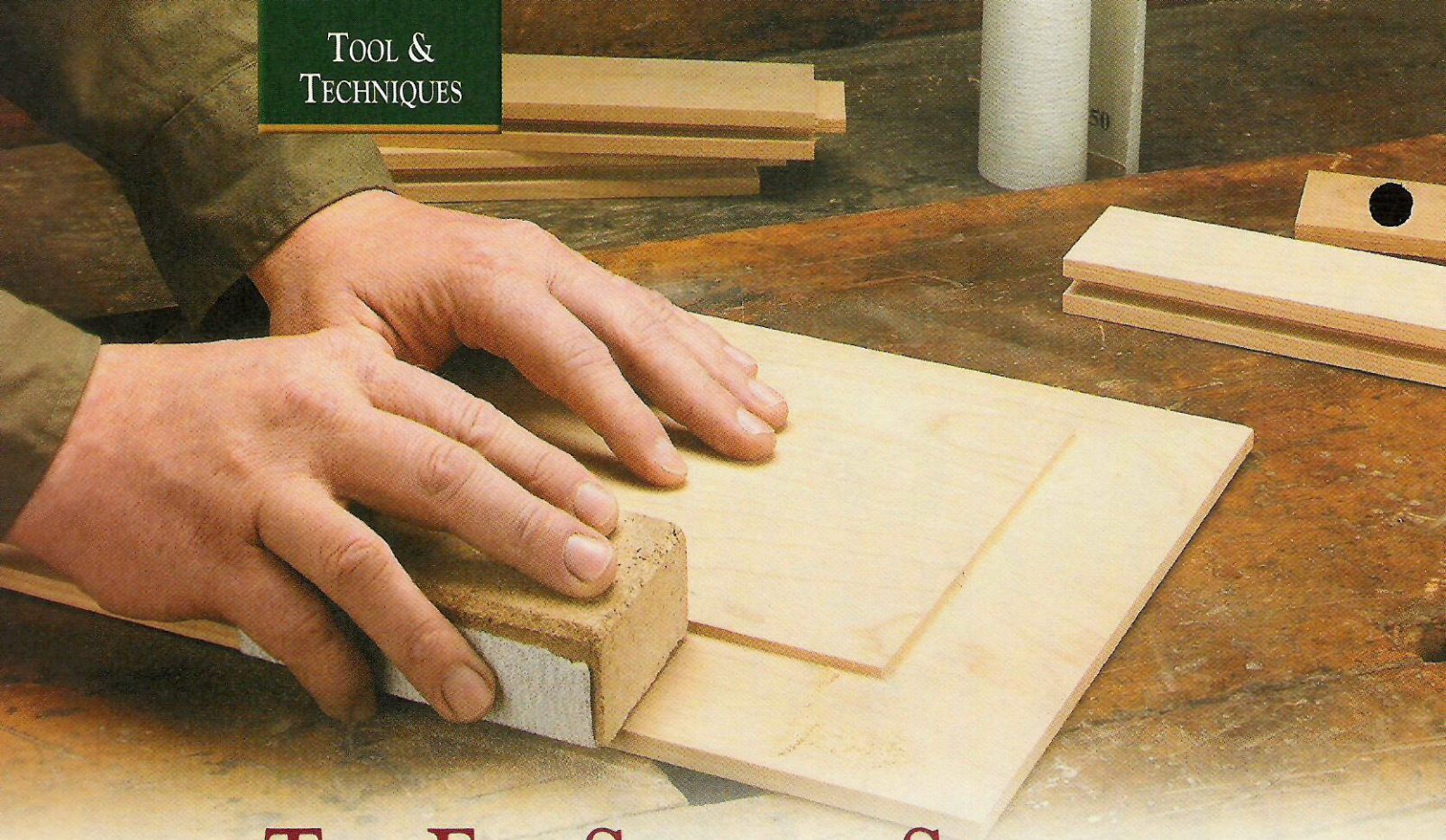

TIPS FOR SANDING SUCCESS

Sanding is something that most woodworkers take for granted. We don't think much about it, we just do it. It can be pretty dull, it's always dusty and it's usually a little tiring. But when you think about it, sanding is what creates the final surface of a project. To put it simply, the finish sanding that you do or don't do can make or break a project. After spending more hours sanding than I care to remember, I've managed to come up with a few simple tips to help reduce the "chore" of sanding.

THE GOAL. Before you jump into any job, it's a good idea to have an end goal in sight. And sanding is no exception. Here the goal is simple but pretty important. You want to smooth and refine all the surfaces so that when the finish goes on, the project will look its best.

I'm likely to use 4 or 5 power tools during construction and each one can leave its mark. But when I'm all done, I want the project itself to show-off, not what I used to make it. And good sanding is the key here.

I like tabletops and other large surfaces to be nice and flat with only the grain of the wood showing (no glue joints, planer marks, dips, or bumps). And any contours should be smooth and graceful. When I run my fingers over a flush joint, I don't want to feel a thing. Invisible to the eye *and* to the touch. That's what I always try to shoot for.

SIMPLE TOOLS. In the end, I like to make sanding a "hands-on" task. I use belt sanders, pad sanders, and drum sanders for the rough stuff, but when it comes to the final surface, nothing beats sandpaper and a little elbow grease. It's not rocket science, so just keep it simple.

When I'm working on any flat surface, from a door stile to a tabletop, the sandpaper is always wrapped around a padded sanding block. Using a block helps to create flat surfaces and keep them flat.

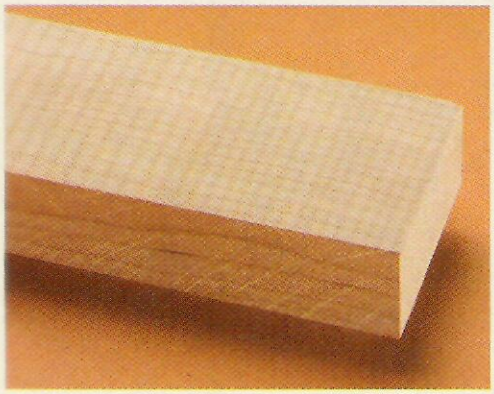

▲ *This piece of cherry, straight from the mill with pretty serious saw and planer marks, needs some work before the joinery starts.*

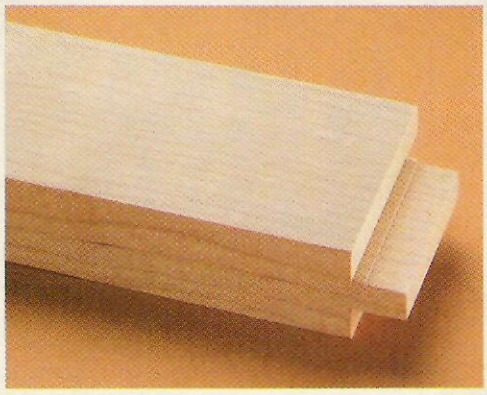

▲ *The same piece of cherry shows a clean surface and crisp joinery, after just a little work with some 100 grit sandpaper.*

A little bit of "hard" padding makes a big difference. What the padding does is form soft spots where the dust can accumulate and be released from under the block. Your paper won't clog quite as fast and you won't get streaks on your work from lumps of sanding dust. It's an old trick, but it sure works.

FINGERS. The second important sanding tool isn't very "high tech." It's just your fingers. Sometimes a quarter sheet of sandpaper, folded in thirds and wrapped around a finger or two is the only way to get into that small cove or smooth the router marks off that bead trim. It's pretty simple, but there's nothing better.

And I use my fingers in another way. They can sometimes be a better judge of flatness than your eyes. An auto body repairman once told me that "if you can't feel it, you can't see it." And he was right. If you run your fingers over a joint and it feels smooth, you can trust that it will look good. So for me the final test is usually the finger test. If my work passes this test, I know it's smooth.

GOOD LIGHT. It's really just common sense, but good light can be a tool. It's hard to do a good job when you can't see what you're working on.

And look at the work from more than one angle. Sometimes problems aren't noticeable until you see them in a "different light." If you're not sure about your progress, a little mineral spirits wiped on the surface can help. Under good light the wet thinner will give you a preview of what you'll get with a finish, but it won't raise the grain.

START EARLY. I don't wait until the project is assembled before I start sanding. Almost as soon as my pieces come off the table saw, I start sanding. It's really just another step to work into the building process. And when you fit it into the flow you'll get a better result in the end.

I don't do a lot of sanding right off the bat, but enough to get a good head start. The bottom photos at left show the difference that just a small amount of work with some coarse sandpaper can make.

Get started at removing the surfacing marks and saw marks and any major blemishes on your rough cut blanks before you get to the joinery. This way you'll be working with pieces that are pretty close to final thickness so your joinery should be a little crisper and more accurate.

Next, I concentrate on removing tool marks and smoothing the flat surfaces and contours. This is rough work. Coarse sandpaper can be a pretty good shaping tool, and I take advantage of it. (One of the few times I sand below 100-grit is when I'm "refining" a curve.)

THE RIGHT SEQUENCE. When it comes to sanding it sometimes pays to be aggressive. Early on, I used to waste a lot of time and energy trying to sand away planer or jointer marks with 180 or 220-grit paper. But no longer. Now I usually start with 100 or 120-grit paper. You can get a lot farther, a lot faster this way.

This may be stating the obvious, but the key to this strategy is to start coarse and then work your way up through the finer grits. Start at 100-grit, and your next stop could be at 150-grit. And when you've got a consistent surface at 150, step up to180.

THINK AHEAD. And think a bit ahead when you're sanding. Sand the hard to reach spots before assembly. I've learned this lesson the hard way on a project or two. So I make sure the difficult spots get all the attention they need before glue-up.

STAY FOCUSED. It's very easy to lose track of what you're doing when sanding and I try really hard to avoid this. One of the goals of my woodworking is to have crisp, sharply defined surfaces and edges. I want my projects to look like I paid attention to the details.

You want joint lines to end up perfectly flush. On a door frame, for example, you don't want to be able to see or feel where the stile ends and the rail begins. And you don't want to accidently "round over" the square edges. I work to keep all the edges crisp and sharp while working up through the sanding stages. (This is where a sanding block earns its keep.

And then as a final step, you can gently ease the sharp corners with some fine paper. Just enough to make them feel comfortable (see page 5 for a tip on easing square edges).

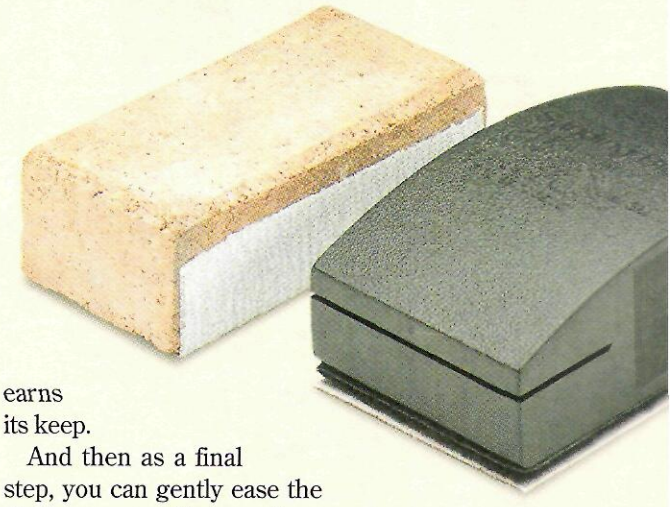

▲ *Whether it's shop made or "store bought", a padded sanding block will make the job easier with better results.*

ALL THE SAME. Consistency is one of the keys to getting a smooth final surface and a good finish. Treat all the parts and surfaces the same. It's as simple as that. Don't be tempted to skip over one of the grits or maybe quit a little early. It might look fine at the time but you'll regret it later on. The finish is likely to give away the "cut corners."

This is especially important if you plan to stain. Rough areas will usually stain darker than smoother surfaces. A blotchy stain job can be the result of some hasty sanding. But if you sand everything the same, it will stain and finish the same.

And if you plan to stain, sand a little finer on the end grain. It tends to soak-up more stain and ends up looking darker than the face grain. But if it's sanded to a finer grit, the color will be more consistent.

WHERE TO STOP. Where you stop usually depends on the type of finish you plan to use. If I'm going to paint a project, a 120 or 150-grit surface is great. For a clear built-up finish like varnish or shellac I don't go past 180-grit. But if you're applying a really thin, oil-type finish, it doesn't hurt to sand to 220-grit.

When I'm giving a project the final once over with fine sandpaper, I work until everything looks good, and then I sand a little more. A little extra effort at this point beats regrets later on. If the project is consistently smooth, I know I'll be pleased when the finish goes on. W

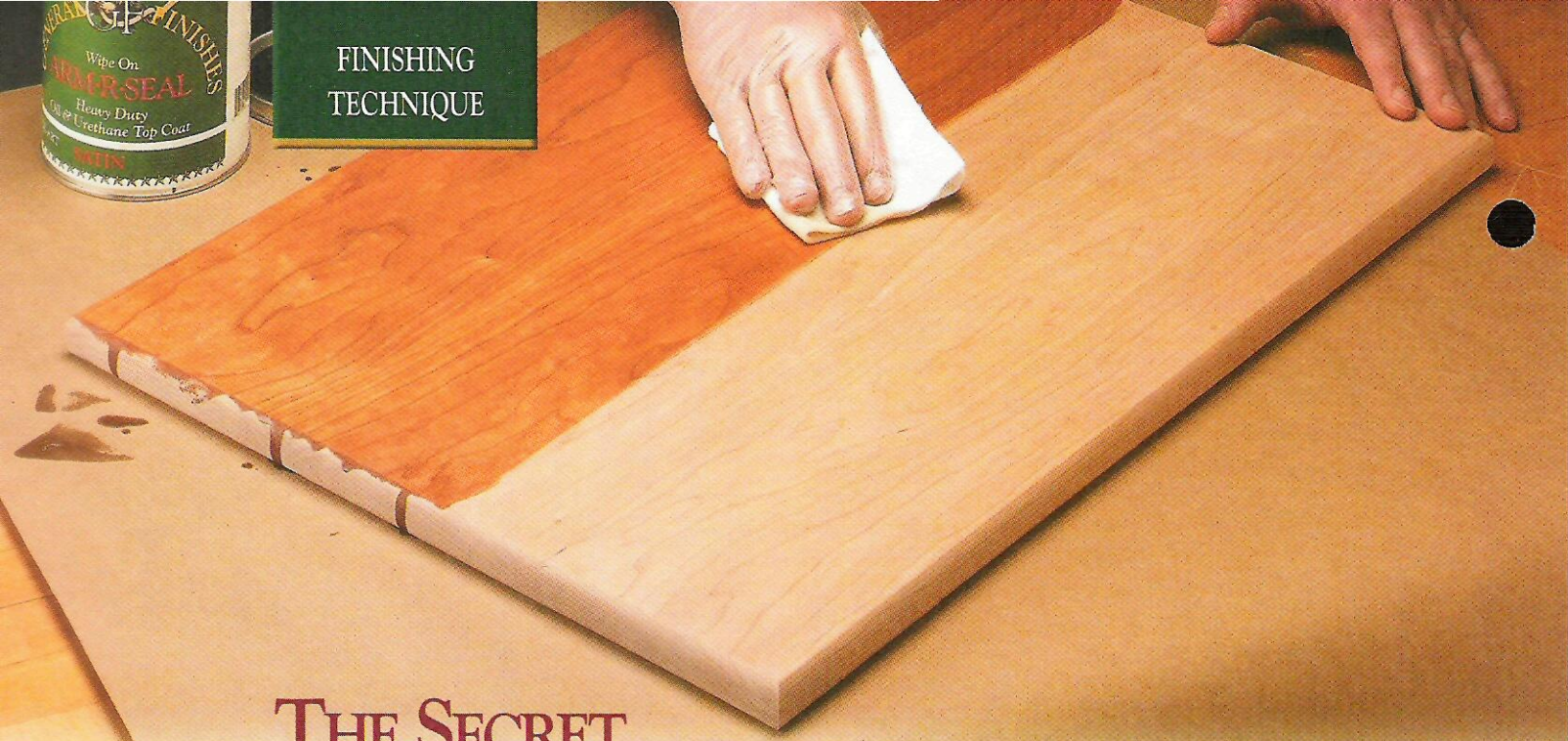

THE SECRET TO WIPE-ON FINISHES

With the right wipe-on and a little know how, you can finish like a pro.

What's not to like about wipe-on finishes? You just wipe it on with an old t-shirt or sock, wipe off the excess, and you're done — no brush marks, lap marks, or drips to worry about. You can get a top-quality finish in a fairly short time, without a lot of hard work. That's why I turn to this type of finish time and time again.

The only real catch is that there are so many of these products and they're all a little different. Take a look at the photo below and you'll get the idea. But I've found that the key to success is to know which type of wipe-on is right for your project and how to apply it.

LINSEED OIL. One of the oldest wipe-on finishes is boiled linseed oil and it's still in use today. It's called "boiled" because it used to be heat processed to make it dry faster. But today, metallic dryers are added.

The best thing about linseed oil is the warm, amber color it gives to the wood. But beyond this, it doesn't have too much going for it. When linseed oil dries (a very slow process), it just forms a thin, soft film. No matter how many coats you apply, you'll never get much of a build or a decent sheen.

And to top it off, linseed oil gives you little if any moisture or scratch resistance. At times, I'll use a coat of linseed oil just for the color it adds. But then I always put a harder finish over it for extra protection.

TUNG OIL. Next in line comes pure tung oil. Just about every woodworker has heard of tung oil because the name appears on so many finishing products.

Pure tung oil is just a small step up from linseed oil. After many coats it'll give you a very thin build with a slight sheen. And since it dries a little harder than linseed oil, you get a little more moisture and scratch resistance. A coat of raw tung oil can literally take several days to dry, so don't look to tung oil for a quick finish.

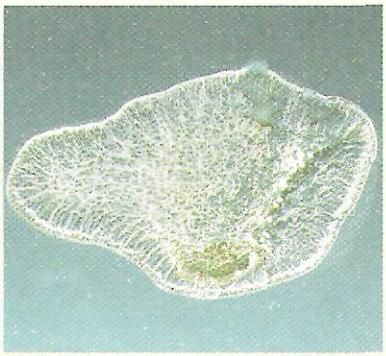

▲ *A pure oil (tung or linseed) dries soft, wrinkled, and very slowly.*

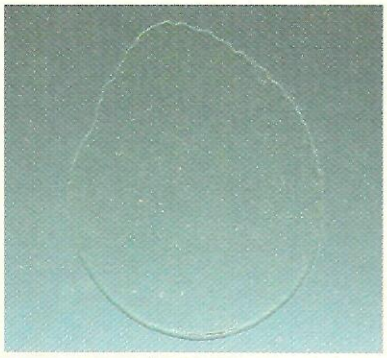

▲ *A wiping varnish will dry smooth, hard, clear, and quickly.*

▲ *As you might guess, an oil/varnish blend is somewhere in between.*

WIPING VARNISH. When you take a drying oil (linseed, tung, or even soybean), add hard varnish resins and "cook" this mixture, you get a standard varnish. The oil and resins combine to form a completely new substance. If you add some mineral spirits to thin the mix, you have what's called a wiping varnish.

Wiping varnishes have most of the good qualities of a brushed-on varnish without the hassles. You'll get a decent build with a nice sheen and plenty of protection. And with a wiping varnish, you're applying thin coats of finish, so the drying time is cut way down. You don't have the worry of dust settling in the finish.

But there are a couple drawbacks to wiping varnishes. One is that they can dry *too* fast. You can't just wipe on a coat and leave it for an hour before wiping it down. It will tack up leaving you with a sticky mess. The second drawback is that you'll get a pretty slow build (film thickness) compared to a brushed-on varnish. But I prefer the "in the wood" look of a thinner finish.

OIL/VARNISH BLENDS. A lot of the wipe-on products you'll find on the shelf are oil/varnish blends (*Watco Danish Oil, Minwax Antique Oil*). These products are basically just a dollop of oil (linseed or tung), a dollop of varnish and some thinner. So they have some characteristics of both a pure oil and a varnish.

The oil in the mix slows the drying time so the application task is a little more leisurely. You've got longer to let these products "soak in" before they tack up. The oil also "softens" the sheen a little. Finally the varnish in the mix provides a harder and quicker build than a pure oil with a fair amount of moisture and scratch resistance.

But on the other hand, an oil/varnish blend won't give you the hard film of a wiping varnish and won't build as fast to a high sheen. Plus the results from this type of product can vary quite a bit depending on the oil to varnish ratio. But all-in-all it can be a pretty good compromise.

WHICH IS WHICH? You can't rely on the can or bottle to tell you exactly what's in your wiping finish. A lot of what you read on the label is just marketing hype. A good way to get an idea of what you have is with a "puddle test." Just pour a small "dab" of the finish on a piece of glass and let it sit. The photos above show how the different types of wiping finish will dry. The length of the cure time and the look after drying will give you a pretty good idea of what's in the can or bottle.

APPLICATION. When I have to brush on a finish, I'm always a little nervous. There's a lot that can go wrong. But I actually enjoy applying a wipe-on. It's so easy that you can enjoy watching the finish bring out the color and grain of the wood.

WIPE ON/WIPE OFF. No matter what type of wipe-on finsh you're using, the process is pretty much the same. You wipe it on and then you wipe off the excess. Pretty simple.

I don't worry too much at the wipe-on stage. You can just pick up a lint free rag (old t-shirts are great) and go to work. I put the finish on pretty wet to make sure I get into all the grooves and corners. Don't worry about runs, they'll get cleaned up later. Just don't get too far ahead here. Depending on the finish, you might not have much time to start the wipe-off before the finish starts to tack up.

The wipe-off stage is where you need to pay a little more attention. A wiping varnish is going to tack up pretty quick. Don't let it sit for more than a few minutes before you start wiping off the excess. But with an oil or an oil/varnish blend you've got plenty of time. You can afford to let it soak in a little bit. When I do the "wipe down," I try to be thorough. This will give you a more even build and sheen.

A minor problem to watch for is "bleedback." This is when the finish comes out of the pores of the wood and forms spots on the surface. If they don't get wiped off before they dry, cleaning them off can be a pain.

COATS. With either a wiping varnish or an oil/varnish mix, a little light sanding or a rub-down with some steel wool between coats is a good idea. Most wipe-ons take at least three coats to get much of a build, but this depends on the type you're using. A wiping varnish is going to build a little faster than an oil/varnish blend. But one of the best things about wipe-ons is that with thin coats you've got great control over the build and the sheen. You can get just the right finish to bring out the best in a project.

RECOMMENDATION. Most of the time when I go with a wipe-on finish, it's a wiping varnish. They can be a little trickier to apply, but I like the advantages they offer. The quicker build, better protection, and fast drying time are what I'm after. But I will switch to an oil/varnish blend if I'm taking on a large project. It's more relaxed. Either way, you'll get a great finish with minimum stress.

MAKE YOUR OWN

Wiping Varnish
2 parts varnish (any type)
3 parts mineral spirits

Oil-Varnish Blend
1 part varnish (any type)
1 part linseed or tung oil
1 part mineral spirits

LOW-ANGLE SPOKESHAVE

This tool excels when you need to smooth a curved surface.

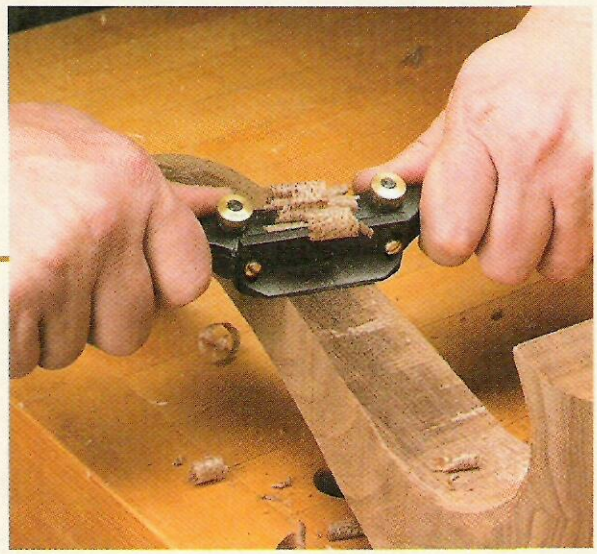

After I made the flared legs for the hall table, I came across a new tool that I wish I'd known about before — the *Veritas* low-angle spokeshave.

Now I know that spokeshaves aren't exactly new. But there's something new about this one. If you've tried using a spokeshave before and found them to be a little fussy to set up, you just might want to give this one a try.

REVERSIBLE TOE PIECE. What really sets this spokeshave apart is the reversible toe piece (Fig. 1). It controls the depth of cut and guides the blade. In the old days you needed one spokeshave to cut inside curves and another one to cut outside curves. This one tool will work on *both*.

The drawings below show what I'm talking about. If you need to trim a flat edge or an outside curve, set the wide end down, as in Fig. 1a. This acts as a flat sole to guide the blade around the curve.

To make a cut on an inside curve, all you have to do is flip the toe piece around. Now the sole is much shorter. And as Fig. 1b shows, it still guides the blade but without getting in the way of an upward-sloping curve.

USING THE SPOKESHAVE. A spokeshave works a lot like a hand plane does. But instead of being driven across the workpiece in a straight line, you steer it with two handles — like the handlebars of a bicycle.

Spokeshaves can be used by pushing or pulling, depending on what's most comfortable for you. (I usually pull.) Grip the spokeshave by holding the handles with your thumbs pointing toward the middle. I like to hold it at a slight angle to the direction of cut, which gives the blade a smoother, slicing action.

When using the spokeshave, it's usually best to cut with the grain. But that's not always easy to do on a curved piece where the grain isn't always running in the same direction.

Here's where the low cutting angle can make a big difference. It allows you to get a cleaner cut on end grain and where the grain direction changes.

ADJUSTABLE MOUTH. Just like some block planes, you can adjust the mouth to help prevent tearout. To do this on the *Veritas* spokeshave, just loosen the blade and slide it closer to the toe piece when taking thin, wispy shavings. When the toepiece is set for a heavy cut, set the blade farther back to keep the shavings from clogging, as in Figs. 2 and 2a. It's a good idea to practice on some scrap to get the feel of using it.

This spokeshave costs about $45 and comes with a sharp blade and instructions for use. You can order it from *Lee Valley* or from the sources listed on the opposite page. W

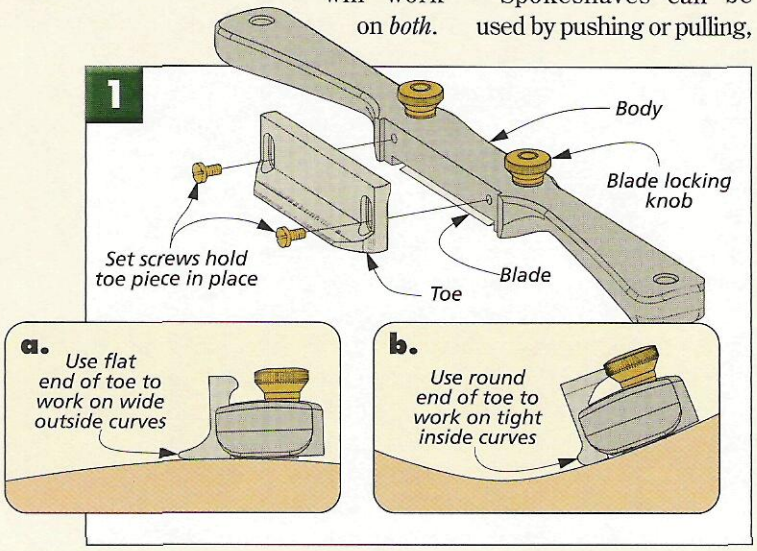

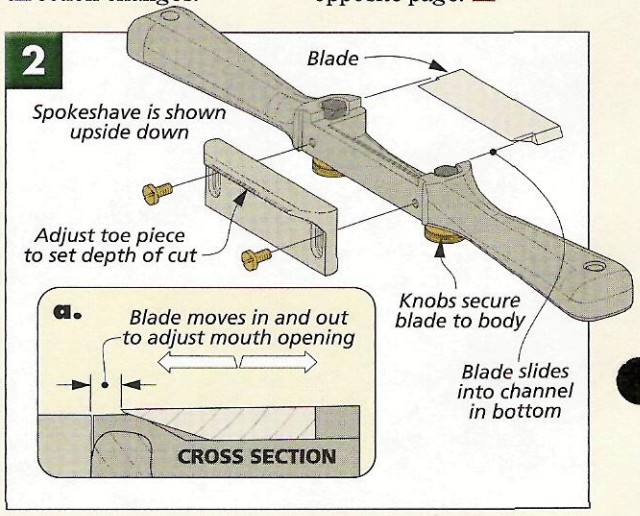

SOURCES

Hall Table

The hardware needed to build the hall table doesn't amount to much. You just need a handful of steel table top fasteners and the screws to mount them. If you can't find the table top fasteners locally, they can be ordered from *Rockler* (#34215) or one of the other sources listed.

VENEER. The beautiful curly maple veneer I used on the table was purchased from *Certainly Wood* — a company that specializes in cabinet-grade veneers. They were very helpful in supplying the size and quality of veneer that I needed for this project. Their number is listed at right as well as a couple other good sources for veneer.

ROUTER BIT. To make the flared legs for the hall table you'll need a 2" flush trim router bit like the one pictured. This size bit really shouldn't be too hard to find. I used an *Amana* bit (#47126) that was purchased from the *Woodsmith Store*. Several of the sources listed at right carry a similar bit that will do the job for you.

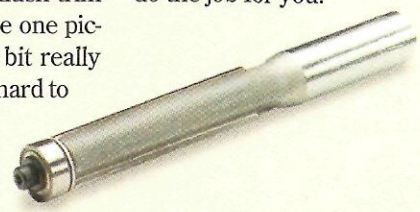

Mortising Jig

To build the mortising jig, you'll need some pretty common hardware and a few special items. The screws, washers, T-nuts, and flange bolts can be found at any hardware or home improvement store. The aluminum T-track and the studded knobs are a little tougher to find.

I bought the T-track at the *Woodsmith Store,* but there are other sources listed at right. Just make sure that what you buy is the right size (3/4" x 3/8").

The studded knobs came from *Rockler.* They stock a good selection of parts like those needed for the mortising jig. Another good source for specialty hardware is *Reid Tool Supply.*

Spokeshave

The low-angle spokeshave featured in the article on the facing page is made by *Veritas Tools* — a division of *Lee Valley.* I bought mine from *Woodcraft,* but you can also purchase it directly from *Lee Valley.*

Plant Stand

The plant stand is another simple hardware project. All you'll need are a few of the same steel table top fasteners mentioned above for the hall table.

TILE. You'll also need to purchase one or more ceramic tiles for the top of the stand. The tile I used was sold as 8" square although it actually measured about 7 13/16" square. The finished sizes of ceramic tile can vary quite a bit, so you probably want to have the tile purchased before you start to build. This way you can adjust the top to fit the tile.

I found my tile at a home improvement store, but you could also try a flooring or ceramic tile store.

Doweling Jig

Doweling jigs are pretty easy to come by and there are lots of types to choose from. The self-centering model that I used works great for drilling out centered mortises. The setup is really simple.

If you can't find one locally, there are several sources for doweling jigs listed at right.

Online Extras

If you don't have internet access, you can have a copy of the Online Extras mailed to you. Just specify which articles you'd like to receive and send a self-addressed, stamped #10 envelope to:

Woodsmith No. 147
Online Extras
P. O. Box 842
Des Moines, IA 50304

MAIL ORDER SOURCES

Similar project supplies may be ordered from the following companies:

Rockler
800-279-4441
rockler.com
Studded Knobs, Table Top Fasteners, T-track, Veneer

Woodsmith Store
800-835-5084
Doweling Jigs, Router Bits, T-track

Bob Morgan Woodworking
502-225-5855
morganwood.com
Veneer

Certainly Wood
716-655-0206
certainlywood.com
Veneer

Lee Valley
800-871-8158
leevalley.com
Doweling Jigs, Studded Knobs, T-track, Table Top Fasteners, Veritas Spokeshave

Lie-Nielsen Toolworks
800-327-2520
lie-nielsen.com
Hand Planes

Reid Tool Supply
800-253-0421
reidtool.com
Jig Supplies

Woodcraft
800-225-1153
woodcraft.com
Doweling Jigs, Veritas Spokeshave, Veneer

Woodworker's Supply
800-645-9292
woodworker.com
Doweling Jigs, Router Bits, Table Top Fasteners

WOODSMITH PROJECT SUPPLIES

To order back issues or a hardware kit from *Woodsmith Project Supplies,* please use our toll-free order line, see below. It's open Monday through Friday, from 8 AM to 5 PM Central Time. Before calling, please have your VISA, MasterCard, Discover, or American Express card ready.

If you would prefer to mail in an order, please call the toll-free phone number below for more information concerning shipping charges as well as any applicable sales tax.

1-800-444-7527

Woodsmith on the web

- "Online Extras" - Plans, Patterns, & More
- Over 100 Woodworking Tips Online
- Visit Our Readers' Project Photo Gallery
- Project Plans You Can Download
- Catalog of Project Kits, Tools, Jigs, & Plans
- Forums for Woodworking, Tools, & Classifieds
- Links to Other Woodworking Sites
- Order *Woodsmith* & *ShopNotes* Back Issues

www.woodsmith.com

Online Customer Service

Click on Subscriber Services at **www.woodsmith.com**

- Access your account status
- Change your mailing or email address
- Pay your bill
- Renew your subscription
- Tell us if you've missed an issue
- Find out if your payment has been received

Final Details

▲ **Classic Oak Plant Stands.**
We've made angled legs straightforward to build with a simple joinery technique. So you can make one or two of these great-looking plant stands in a weekend. See page 24 for complete plans.

▼ **Adjustable Mortising Jig.**
This simple jig can turn your hand-held router into a precision mortising tool. With two adjustable fences, you can rout mortises on the end or edge of just about any workpiece. Detailed plans start on page 18.

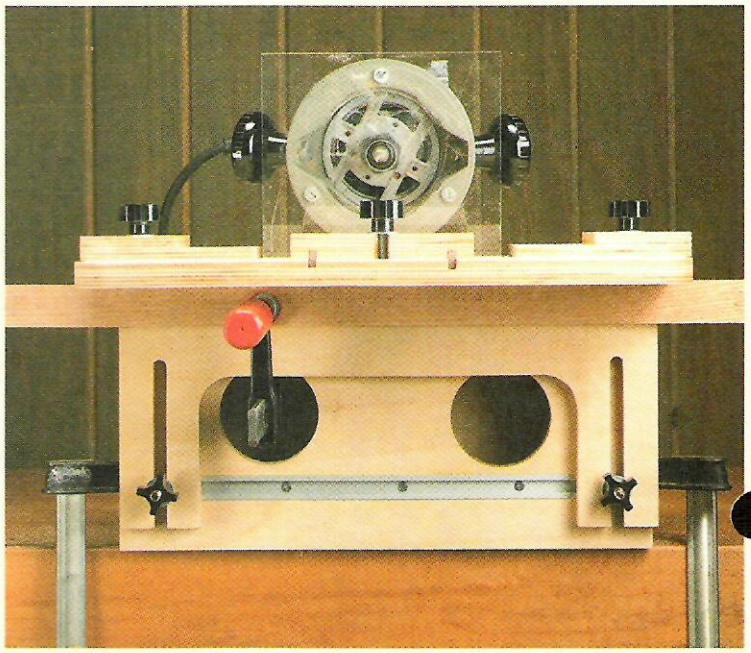

▲ **Hall Table.** *With flared, cherry legs and highly figured maple veneer this hall table has everything. Yet with all these fine details, it's surprisingly easy to build. The step-by-step instructions begin on page 10. And learn the secret to shaped legs starting on page 8.*